Data sheet



EKS36-2KF0B0S01

EKS/EKM36-S

SAFE MOTOR FEEDBACK SYSTEMS

SICK
Sensor Intelligence.



Illustration may differ

Ordering information

Type	part no.
EKS36-2KF0B0S01	1085001

Other models and accessories ➜ www.sick.com/EKS_EKM36-S

Detailed technical data

Features

Special device	✓
Specialty	Customized stator coupling
Standard reference device	EKS36-2KF0B018A, 1084231
Items supplied	M3 mounting screws for stator coupling not included with delivery.

Safety-related parameters

Safety integrity level	Safe increment SIL2 (IEC 61508), SILCL2 (EN 62061) [1]
Category	3 (EN ISO 13849)
Test rate	1 h
Maximum demand rate	216 µs
Performance level	PL d (EN ISO 13849)
Safety-related resolution	Channel 1 = 18 bit or 20 bit, channel 2 = 9 bit
PFH (mean probability of a dangerous failure per hour)	4×10^{-8} [2]
T_M (mission time)	20 years (EN ISO 13849)
$MTTF_D$ (mean time to dangerous failure)	500 years (EN ISO 13849)

[1] For more detailed information on the exact configuration of your machine/unit, please consult your relevant SICK branch office.
[2] The values displayed apply to a diagnostic degree of coverage of 90%, which must be achieved by the external drive system.

Performance

Position	
Resolution per revolution	18 bit
System accuracy	± 120 ″
Signal noise (σ)	± 4 ″ (See “signal noise” and “attenuation” diagrams)
Number of the absolute ascertainable revolutions	1
Available memory area	8,192 Byte
Measurement step per revolution	1,048,576
Measurement principle	Optical

Interfaces

Type of code for the absolute value	Binary
Code sequence	Increasing, when turning the shaft For clockwise rotation, looking in direction “A” (see dimensional drawing)
Communication interface	HIPERFACE DSL®
Initialization time	Max. 500 ms [1]
Measurement external temperature resistance	32 bit value, without prefix (1 Ω) 0 ... 209.600 Ω At –40 °C ... +160 °C: NTC +-2K; PTC+-3K

[1] From reaching a permitted operating voltage.

Electronics

Connection type	Male connector, 4-pin
Supply voltage	7 V ... 12 V
Warm-up time voltage ramp	Max. 180 ms [1]
Recommended supply voltage	8 V
Current consumption	≤ 150 mA (See current consumption diagram) [2]
Output frequency for the digital positionvalue	0 kHz ... 75 kHz

[1] Duration of voltage ramp between 0 and 7.0 V.

[2] Current rating applies when using interface circuit suggestions as shown in HIPERFACE DSL ® manual (8017595).

Mechanics

Shaft version	Tapered shaft
Flange type / stator coupling	Stator coupling
Dimensions	See dimensional drawing
Weight	0.1 kg
Moment of inertia of the rotor	4.5 gcm²
Operating speed	≤ 12,000 min⁻¹
Angular acceleration	≤ 500,000 rad/s²
Operating torque	0.2 Ncm
Start up torque	0.3 Ncm
Permissible movement static	± 0.1 mm, ± 0.2 mm radial, axial
Permissible movement dynamic	± 0.05 mm radial ± 0.1 mm axial
Life of ball bearings	3.6 x 10^9 revolutions

Ambient data

Operating temperature range	–20 °C ... +115 °C [1]
Storage temperature range	–40 °C ... +125 °C [2]
Relative humidity/condensation	90 %, Condensation not permitted

[1] Given typical thermal connection between motor flange and encoder stator coupling. The max. internal sensor temperature may not exceed 125 °C.

[2] Without package.

[3] The EMC according to the standards quoted is achieved when the motor feedback system is mounted in an electrically conductive housing, which is connected to the central earthing point of the motor controller via a cable screen. The GND-(0 V) connection of the supply voltage is also grounded here. If other shielding concepts are used, users must perform their own tests.

[4] With mating connector inserted and closed cover.

Resistance to shocks	100 g, 6 ms (according to EN 60068-2-27)
Frequency range of resistance to vibrations	50 g, 10 Hz ... 2,000 Hz (EN 60068-2-6)
EMC	According to EN 61000-6-2, EN 61000-6-4 and IEC 61326-3 [3]
Enclosure rating	IP40, with mating connector inserted and closed cover (IEC 60529-1) [4]

[1] Given typical thermal connection between motor flange and encoder stator coupling. The max. internal sensor temperature may not exceed 125 °C.

[2] Without package.

[3] The EMC according to the standards quoted is achieved when the motor feedback system is mounted in an electrically conductive housing, which is connected to the central earthing point of the motor controller via a cable screen. The GND-(0 V) connection of the supply voltage is also grounded here. If other shielding concepts are used, users must perform their own tests.

[4] With mating connector inserted and closed cover.

Certificates

EU declaration of conformity	✓
UK declaration of conformity	✓
ACMA declaration of conformity	✓
Moroccan declaration of conformity	✓
China-RoHS	✓
EC-Type-Examination approval	✓
Information according to Art. 3 of Data Act (Regulation EU 2023/2854)	✓

Classifications

ECLASS 5.0	27270590
ECLASS 5.1.4	27270590
ECLASS 6.0	27270590
ECLASS 6.2	27270590
ECLASS 7.0	27270590
ECLASS 8.0	27270590
ECLASS 8.1	27270590
ECLASS 9.0	27270590
ECLASS 10.0	27273805
ECLASS 11.0	27273901
ECLASS 12.0	27273901
ETIM 5.0	EC001486
ETIM 6.0	EC001486
ETIM 7.0	EC001486
ETIM 8.0	EC001486
UNSPSC 16.0901	41112113

Dimensional drawing

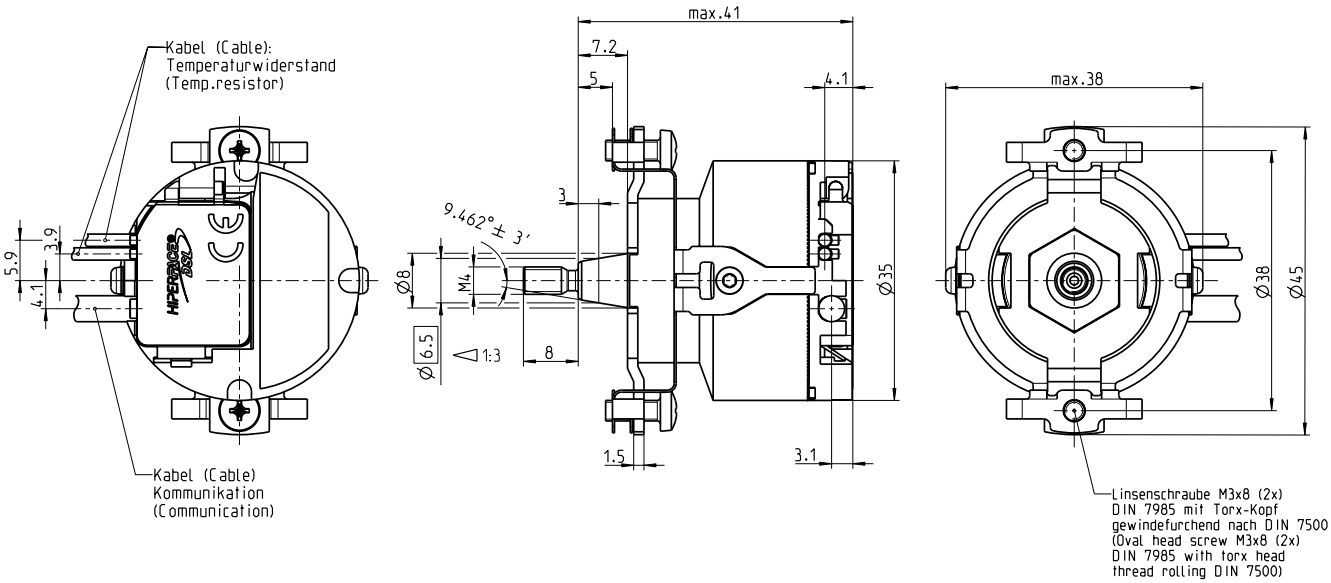

Dimensions in mm (inch)

PIN assignment Temperature sensor pin assignment

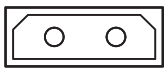

2 1

PIN	Signal	Explanation
1	T+	Thermistor connection
2	T-	Thermistor connection (to ground)
Recommended outer diameter of set of stranded wires: 2.2 mm ± 0.1 mm		
Recommended mating connector: Harwin M80-8990205		

Recommended accessories

Other models and accessories ➜ www.sick.com/EKS_EKM36-S

	Brief description	Type	part no.
Mounting systems			
	• **Description:** Mounting tools • **Suitable for:** Anschlussart T,J,K	BEF-MW-EKX36	2060224

	Brief description	Type	part no.
connectors and cables			
	• **Connection type head A:** Female connector, stranded wire, 2-pin, straight • **Connection type head B:** Flying leads • **Signal type:** HIPERFACE DSL® • **Cable:** 0.2 m, 2-wire • **Description:** HIPERFACE DSL®, twisted, unshielded	DOL-0B02-G0M2XC1	2062083
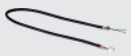	• **Connection type head A:** Female connector, stranded wire, 4-pin, straight • **Connection type head B:** Flying leads • **Signal type:** HIPERFACE DSL® • **Cable:** 0.36 m, 2-wire • **Description:** HIPERFACE DSL®, twisted, shielded	DOL-0B02-G0M3AC2	2108944
	• **Connection type head A:** Female connector, stranded wire, 2-pin, straight • **Connection type head B:** Flying leads • **Signal type:** HIPERFACE DSL® • **Cable:** 0.3 m, 2-wire • **Description:** HIPERFACE DSL®, twisted, unshielded	DOL-0B02-G0M3XC1	2091818
	• **Connection type head A:** Female connector, stranded wire, 2-pin, straight • **Connection type head B:** Flying leads • **Signal type:** HIPERFACE DSL® • **Cable:** 0.4 m, 2-wire • **Description:** HIPERFACE DSL®, twisted, unshielded	DOL-0B02-G0M4XC1	2086286
	• **Connection type head A:** Female connector, stranded wire, 4-pin, straight • **Connection type head B:** Flying leads • **Signal type:** HIPERFACE DSL® • **Cable:** 0.43 m, 2-wire • **Description:** HIPERFACE DSL®, shielded • **Note:** Non-isolated drain wire	DOL-0B03-G0M4XC1	2087314

SICK AT A GLANCE

SICK is one of the leading manufacturers of intelligent sensors and sensor solutions for industrial applications. A unique range of products and services creates the perfect basis for controlling processes securely and efficiently, protecting individuals from accidents and preventing damage to the environment.

We have extensive experience in a wide range of industries and understand their processes and requirements. With intelligent sensors, we can deliver exactly what our customers need. In application centers in Europe, Asia and North America, system solutions are tested and optimized in accordance with customer specifications. All this makes us a reliable supplier and development partner.

Comprehensive services complete our offering: SICK LifeTime Services provide support throughout the machine life cycle and ensure safety and productivity.

For us, that is “Sensor Intelligence.”

WORLDWIDE PRESENCE:

Contacts and other locations –www.sick.com