OWR-081525L-32B

Wideband receiver

Optimized for wideband. HAC compatible. For mobile application



Characteristics

Size (LxWxH) [mm]	15.0x8.0x3.1	
Sensitivity [dBSPL]	92.5±3dB	[dBSPL @1kHz, 15mW, 1cm]
Impedance [Ω]	32	
Power [W]	15.0 / 20.0	Free field
F0 [Hz]	320	Free field
Termination	Leaf spring	

Specifications are subject to change without prior notice. Upon request Ole Wolff can supply further specifications, simulation parameters etc.

Mechanical drawing

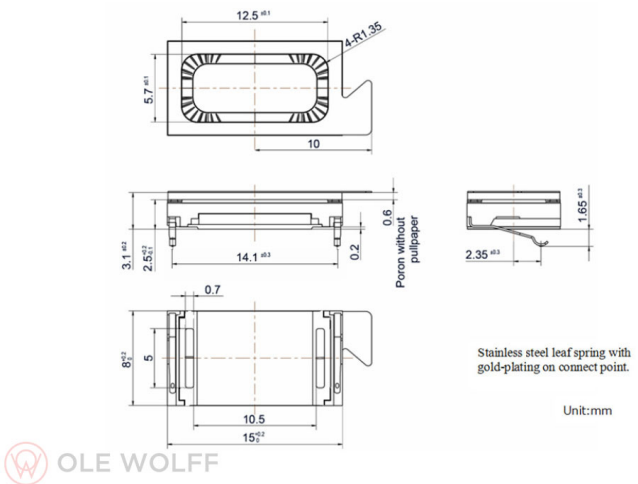

OLE WOLFF

Sound Pressure Level

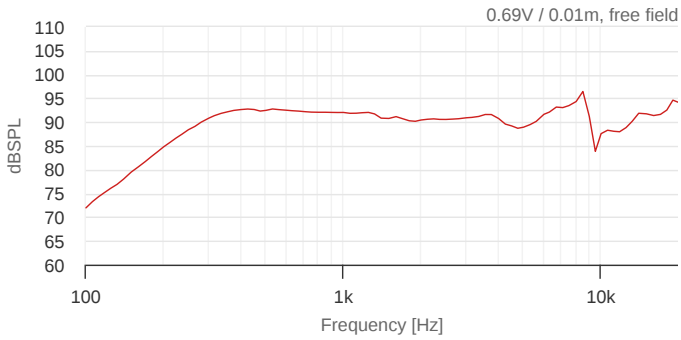

THD

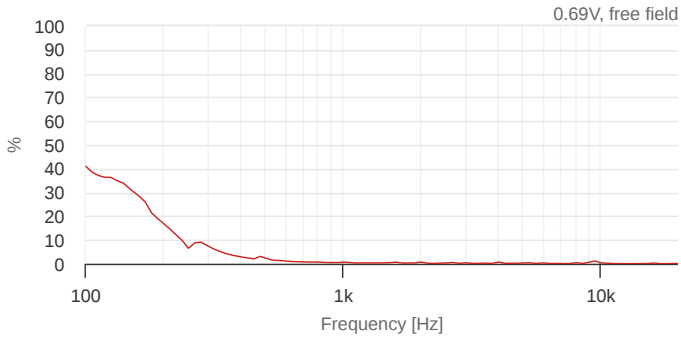

Impedance

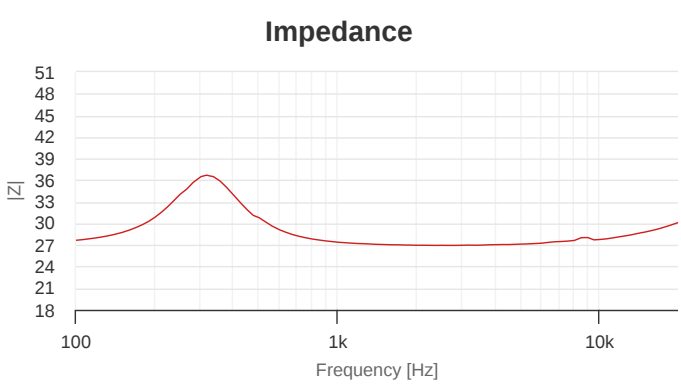

ACOUSTICS DESIGNED AND ENGINEERED IN DENMARK · OLE WOLFF ·

Ole Wolff Elektronik A/S, Roedengvej 14, 4180 Soroe, DK Denmark
T: +45 5783 3830 | sales@owolff.com