SIEMENS

Data sheet 3RV2311-1GC20



Circuit breaker size S00 for starter combination Rated current 6.3 A N-release 82 A Spring-type terminal Standard switching capacity

product brand name	SIRIUS
product designation	Circuit breaker
design of the product	For starter combinations
product type designation	3RV2
General technical data	
size of the circuit-breaker	S00
size of contactor can be combined company-specific	S00, S0
product extension auxiliary switch	Yes
power loss [W] for rated value of the current	
● at AC in hot operating state	7.25 W
● at AC in hot operating state per pole	2.4 W
insulation voltage with degree of pollution 3 at AC rated value	690 V
surge voltage resistance rated value	6 kV
shock resistance according to IEC 60068-2-27	25g / 11 ms
mechanical service life (operating cycles)	
● of the main contacts typical	100 000
● of auxiliary contacts typical	100 000
electrical endurance (operating cycles) typical	100 000
reference code according to IEC 81346-2	Q
Substance Prohibitance (Date)	10/01/2009
Ambient conditions	
installation altitude at height above sea level maximum	2 000 m
ambient temperature	
● during operation	-20 ... +60 °C
● during storage	-50 ... +80 °C
● during transport	-50 ... +80 °C
relative humidity during operation	10 ... 95 %
Main circuit	
number of poles for main current circuit	3
operating voltage	
● rated value	20 ... 690 V
● at AC-3 rated value maximum	690 V
● at AC-3e rated value maximum	690 V
operating frequency rated value	50 ... 60 Hz
operational current rated value	6.3 A
operational current	
● at AC-3 at 400 V rated value	6.3 A
● at AC-3e at 400 V rated value	6.3 A
operating power	
● at AC-3	

Subject to change without notice
© Copyright Siemens

— at 230 V rated value	1.5 kW
— at 400 V rated value	2.2 kW
— at 500 V rated value	3 kW
— at 690 V rated value	4 kW
● at AC-3e	
— at 230 V rated value	1.5 kW
— at 400 V rated value	2.2 kW
— at 500 V rated value	3 kW
— at 690 V rated value	4 kW
operating frequency	
● at AC-3 maximum	15 1/h
● at AC-3e maximum	15 1/h
Auxiliary circuit	
number of NC contacts for auxiliary contacts	0
number of NO contacts for auxiliary contacts	0
number of CO contacts for auxiliary contacts	0
Protective and monitoring functions	
product function	
● ground fault detection	No
● phase failure detection	No
maximum short-circuit current breaking capacity (Icu)	
● at AC at 240 V rated value	100 kA
● at AC at 400 V rated value	100 kA
● at AC at 500 V rated value	100 kA
● at AC at 690 V rated value	6 kA
operating short-circuit current breaking capacity (Ics) at AC	
● at 240 V rated value	100 kA
● at 400 V rated value	100 kA
● at 500 V rated value	100 kA
● at 690 V rated value	4 kA
response value current of instantaneous short-circuit trip unit	82 A
UL/CSA ratings	
full-load current (FLA) for 3-phase AC motor	
● at 480 V rated value	6.3 A
● at 600 V rated value	6.3 A
yielded mechanical performance [hp]	
● for single-phase AC motor	
— at 110/120 V rated value	0.25 hp
— at 230 V rated value	0.5 hp
● for 3-phase AC motor	
— at 200/208 V rated value	1 hp
— at 220/230 V rated value	1.5 hp
— at 460/480 V rated value	3 hp
— at 575/600 V rated value	5 hp
Short-circuit protection	
product function short circuit protection	Yes
design of the short-circuit trip	magnetic
design of the fuse link for IT network for short-circuit protection of the main circuit	
● at 400 V	gL/gG 50 A
● at 500 V	gL/gG 40 A
● at 690 V	gL/gG 35 A
Installation/ mounting/ dimensions	
mounting position	any
fastening method	screw and snap-on mounting onto 35 mm DIN rail according to DIN EN 60715
height	106 mm
width	45 mm
depth	97 mm
required spacing	
● with side-by-side mounting at the side	0 mm
● for grounded parts at 400 V	

Subject to change without notice
© Copyright Siemens

— downwards	30 mm
— upwards	30 mm
— at the side	9 mm
● for live parts at 400 V	
— downwards	30 mm
— upwards	30 mm
— at the side	9 mm
● for grounded parts at 500 V	
— downwards	30 mm
— upwards	30 mm
— at the side	9 mm
● for live parts at 500 V	
— downwards	30 mm
— upwards	30 mm
— at the side	9 mm
● for grounded parts at 690 V	
— downwards	50 mm
— upwards	50 mm
— backwards	0 mm
— at the side	30 mm
— forwards	0 mm
● for live parts at 690 V	
— downwards	50 mm
— upwards	50 mm
— backwards	0 mm
— at the side	30 mm
— forwards	0 mm
Connections/ Terminals	
type of electrical connection	
● for main current circuit	spring-loaded terminals
arrangement of electrical connectors for main current circuit	Top and bottom
type of connectable conductor cross-sections	
● for main contacts	
— solid or stranded	2x (0,5 ... 4 mm²)
— finely stranded with core end processing	2x (0.5 ... 2.5 mm²)
— finely stranded without core end processing	2x (0.5 ... 2.5 mm²)
● for AWG cables for main contacts	2x (20 ... 12)
design of screwdriver shaft	Diameter 3 mm
size of the screwdriver tip	3,0 x 0,5 mm
Safety related data	
B10 value	
● with high demand rate according to SN 31920	5 000
proportion of dangerous failures	
● with low demand rate according to SN 31920	50 %
● with high demand rate according to SN 31920	50 %
failure rate [FIT]	
● with low demand rate according to SN 31920	50 FIT
T1 value for proof test interval or service life according to IEC 61508	10 a
protection class IP on the front according to IEC 60529	IP20
touch protection on the front according to IEC 60529	finger-safe, for vertical contact from the front
display version for switching status	Handle
Certificates/ approvals	

General Product Approval				**Declaration of Conformity**
Confirmation			KC	

Subject to change without notice
© Copyright Siemens

Declaration of Conformity	Test Certificates		Marine / Shipping		
EG-Konf.	Special Test Certificate	Type Test Certificates/Test Report	ABS	BUREAU VERITAS	DNV

Marine / Shipping			other		Railway
LRS	PRS	RINA	Confirmation	VDE	Confirmation

Railway
Vibration and Shock

Further information

Siemens has decided to exit the Russian market (see here).
https://press.siemens.com/global/en/pressrelease/siemens-wind-down-russian-business

Siemens is working on the renewal of the current EAC certificates.
Please contact your local Siemens office on the status of validity of the EAC certification if you intend to import or offer to supply these products to an EAC relevant market (other than the sanctioned EAEU member states Russia or Belarus).

Information on the packaging
https://support.industry.siemens.com/cs/ww/en/view/109813875

Information- and Downloadcenter (Catalogs, Brochures,…)
https://www.siemens.com/ic10

Industry Mall (Online ordering system)
https://mall.industry.siemens.com/mall/en/en/Catalog/product?mlfb=3RV2311-1GC20

Cax online generator
http://support.automation.siemens.com/WW/CAXorder/default.aspx?lang=en&mlfb=3RV2311-1GC20

Service&Support (Manuals, Certificates, Characteristics, FAQs,...)
https://support.industry.siemens.com/cs/ww/en/ps/3RV2311-1GC20

Image database (product images, 2D dimension drawings, 3D models, device circuit diagrams, EPLAN macros, ...)
http://www.automation.siemens.com/bilddb/cax_de.aspx?mlfb=3RV2311-1GC20&lang=en

Characteristic: Tripping characteristics, I²t, Let-through current
https://support.industry.siemens.com/cs/ww/en/ps/3RV2311-1GC20/char

Further characteristics (e.g. electrical endurance, switching frequency)
http://www.automation.siemens.com/bilddb/index.aspx?view=Search&mlfb=3RV2311-1GC20&objecttype=14&gridview=view1

Subject to change without notice
© Copyright Siemens

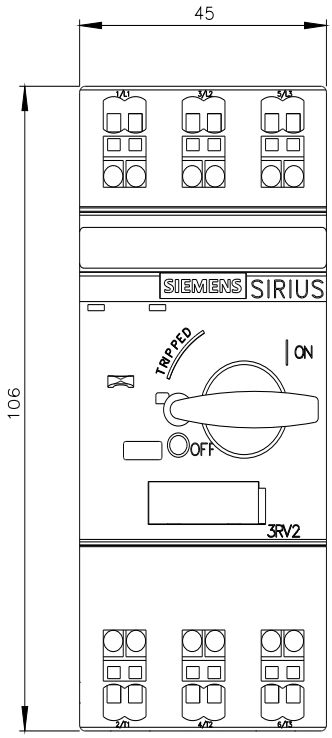

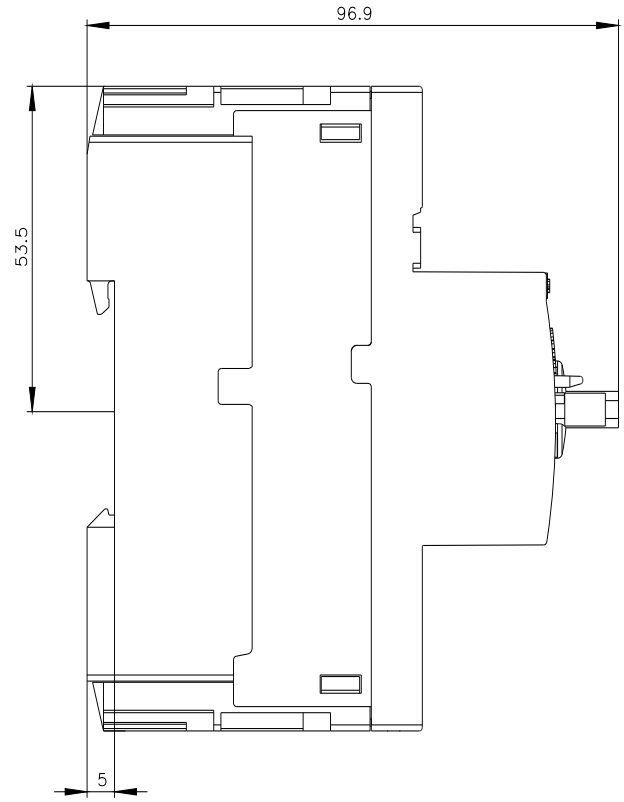

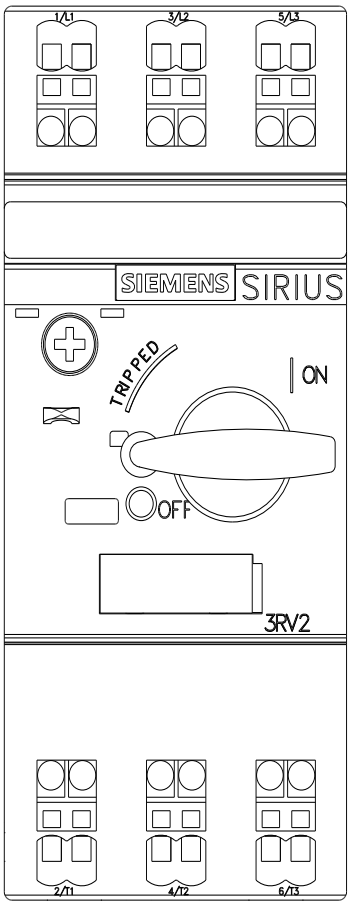

© Copyright Siemens

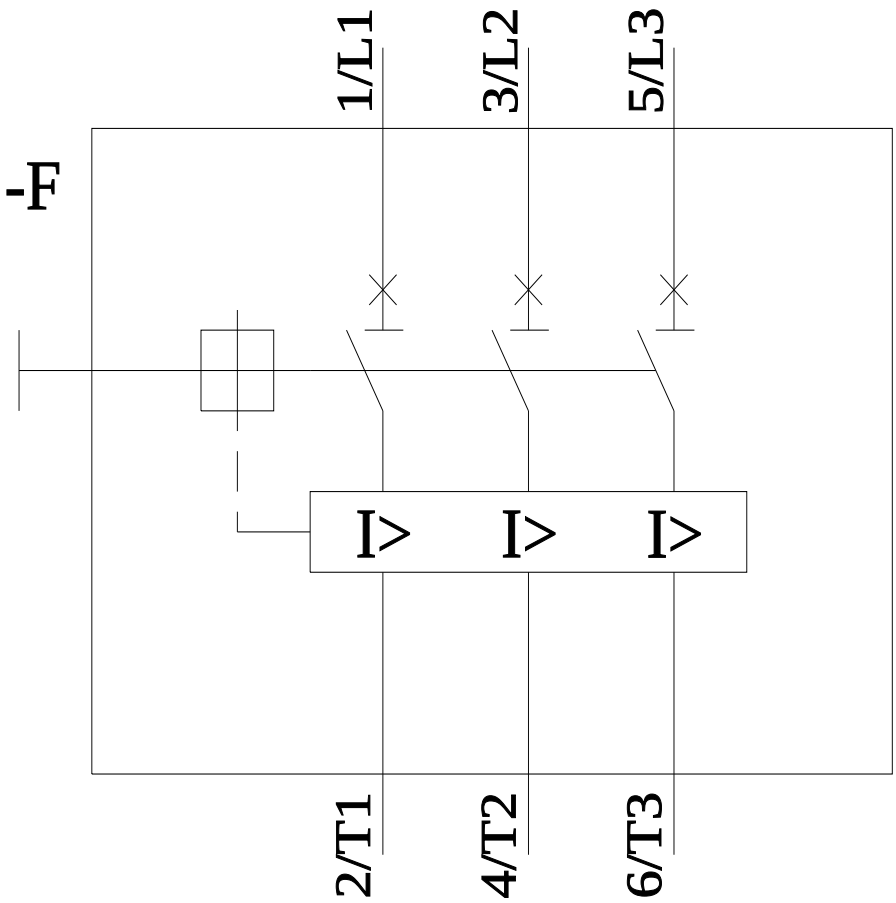

last modified: 11/21/2022

Subject to change without notice
© Copyright Siemens