VAL-MS-T1/T2 600DC-PV/2+V-FM - Lightning/surge arrester type 1/2

2801164

https://www.phoenixcontact.com/us/products/2801164

Please be informed that the data shown in this PDF document is generated from our online catalog. Please find the complete data in the user documentation. Our general terms of use for downloads are valid.



Lightning current arrester / surge protective device for 2-pos. isolated and grounded 600 V DC PV voltage systems, for DIN rail mounting, 3-pos. base element with remote indication contact, three pluggable temperature-monitored protective elements, status message at each plug.

Your advantages

- Quality proven millions of times over in the widest range of applications
- Rapid installation with bridges, thanks to industry-standard overall width of 1 HP
- Easy testing and insulation measurement, thanks to pluggable protection modules

Commercial data

Item number	2801164
Packing unit	1 pc
Minimum order quantity	1 pc
Sales key	CL01
Product key	CL1152
Catalog page	Page 50 (C-4-2019)
GTIN	4046356714297
Weight per piece (including packing)	368.4 g
Weight per piece (excluding packing)	340.62 g
Customs tariff number	85363030
Country of origin	DE

Technical data

Notes

General

Note	The device is intended for touch proof installation in a housing. Ensure that there is a gap of at least 8 mm between the active and grounded parts in the connection area.

Product properties

Product type	PV arrester
Product family	VALVETRAB MS
IEC test classification	PV I / II
	PV T1 / T2
EN type	T1 / T2
IEC power supply system	DC
Type	DIN rail module, two-section, divisible
Distance between live and grounded parts	8 mm
Installation location	Interior
Installation location of the disconnect device	Internal
Accessibility	Accessible
Connection configuration	Y configuration
SPD failure behavior	OCFM (Open-Circuit Failure Mode)
Surge protection fault message	Optical, remote indicator contact

Insulation characteristics

Overvoltage category	III
Pollution degree	2

Electrical properties

Indicator/remote signaling

Connection name	Remote fault indicator contact
Switching function	Changeover contact
Operating voltage	5 V AC ... 250 V AC
	30 V DC
Operating current	5 mA AC ... 1.5 A AC
	1 A DC

Connection data

Connection method	Screw connection
Screw thread	M5
Tightening torque	3 Nm (1.5 mm² ... 16 mm²)
	4.5 Nm (25 mm² ... 35 mm²)

Stripping length	16 mm
Conductor cross section flexible	1.5 mm² ... 25 mm²
Conductor cross section rigid	1.5 mm² ... 35 mm²
Conductor cross section AWG	15 ... 2
Connection method	Fork-type cable lug
Conductor cross section flexible	1.5 mm² ... 16 mm²

Remote fault indicator contact

Connection method	Plug-in/screw connection via COMBICON
Screw thread	M2
Tightening torque	0.25 Nm
Stripping length	7 mm
Conductor cross section flexible	0.14 mm² ... 1.5 mm²
Conductor cross section rigid	0.14 mm² ... 1.5 mm²
Conductor cross section AWG	28 ... 16

Dimensions

Dimensional drawing	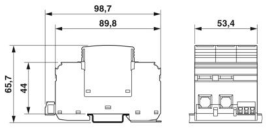
Width	53.4 mm
Height	98.7 mm
Depth	65.7 mm (incl. DIN rail 7.5 mm)
Horizontal pitch	3 Div.

Material specifications

Color	black (RAL 9005)
	black (RAL 9005)
Flammability rating according to UL 94	V-0
CTI value of material	600
Insulating material	PA 6.6-FR
	PBT-FR
Material group	I
Housing material	PA 6.6-FR
	PBT-FR

Mechanical properties

Mechanical data

Open side panel	No

Protective circuit

Mode of protection	(L+) - (L-)
	(L+) - PE
	(L-) - PE
Direction of action	(L+)-PE & (L-)-PE & (L+)-(L-)
Rated load current I_L	80 A
Residual current I_{PE}	≤ 20 µA DC
	≤ 350 µA AC
Standby power consumption P_C	≤ 25.00 mVA
Nominal discharge current I_n (8/20) µs	15 kA
Maximum discharge current I_{max} (8/20) µs	40 kA
Impulse discharge current (10/350) µs, charge	2.5 As
Impulse discharge current (10/350) µs, specific energy	6.25 kJ/Ω
Impulse discharge current (10/350) µs, peak value I_{imp}	5 kA
Total discharge current I_{total} (8/20) µs	40 kA
Total discharge current I_{total} (10/350) µs	7 kA
Voltage protection level U_p	≤ 2.6 kV
Residual voltage U_{res}	≤ 2.6 kV (at I_n)
	≤ 2 kV (at 5 kA)
	≤ 2.3 kV (at 10 kA)
	≤ 2.8 kV (at 20 kA)
	≤ 3.1 kV (at 30 kA)
	≤ 3.6 kV (at 40 kA)
Response time t_A	≤ 25 ns

PV protective circuit

Connection configuration	Y configuration
SPD failure behavior	OCFM (Open-Circuit Failure Mode)

Protective circuit DC voltage side (DC)

Open circuit voltage U_{OCSTC}	≤ 600 V DC
Maximum discharge current I_{max} (8/20) µs	40 kA
Response time t_A	≤ 25 ns
Impulse discharge current (10/350) µs, charge	2.5 As
Impulse discharge current (10/350) µs, specific energy	6.25 kJ/Ω
Impulse discharge current (10/350) µs, peak value I_{imp}	5 kA
Total discharge current I_{total} (8/20) µs	40 kA
Total discharge current I_{total} (10/350) µs	7 kA
Insulation resistance R_{iso}	> 5 GΩ (at 500 V DC)
Nominal discharge current I_n (8/20) µs	15 kA
Rated load current I_L	80 A
Continuous operating current I_{CPV}	< 20 µA
Maximum continuous operating voltage U_{CPV}	720 V DC
Short-circuit current rating I_{SCPV}	2000 A

Residual voltage U_{res}	≤ 2.6 kV (at I_n)
	≤ 2 kV (at 5 kA)
	≤ 2.3 kV (at 10 kA)
	≤ 2.8 kV (at 20 kA)
	≤ 3.1 kV (at 30 kA)
	≤ 3.6 kV (at 40 kA)
Residual current I_{PE}	≤ 20 µA DC
	≤ 350 µA AC
Voltage protection level U_p	≤ 2.6 kV
Standby power consumption P_C	≤ 25.00 mVA

Environmental and real-life conditions

Ambient conditions

Degree of protection	IP20 (only when all terminal points are used)
Ambient temperature (operation)	-40 °C ... 80 °C
Ambient temperature (storage/transport)	-40 °C ... 80 °C
Altitude	≤ 2000 m (amsl)
Permissible humidity (operation)	5 % ... 95 %
Shock (operation)	60g (Half-sine / 11 ms / 3x ±X, ±Y, ±Z)
Vibration (operation)	7.5g (5-500 Hz/2.5 h/XYZ)

Approvals

UL specifications

Maximum continuous operating voltage MCOV	800 V DC
Short-circuit current rating (SCCR)	50 kA
Voltage protection rating VPR	2 kV
Nominal discharge current I_n	20 kA
Mode of protection	(L+) - (L-)
	(L+) - G
	(L-) - G
Nominal voltage	800 V DC
Power distribution system	DC PV
SPD Type	1

UL indicator/remote signaling

Operating voltage	125 V AC
AC operating current	1 A AC

UL connection data

Tightening torque	30 lb_f-in.
Conductor cross section AWG	14 ... 2

Standards and regulations

Standards/specifications	EN 61643-31
Note	2019
Standards/specifications	IEC 61643-31
Note	2018

Mounting

Mounting type	DIN rail: 35 mm

Drawings

Circuit diagram

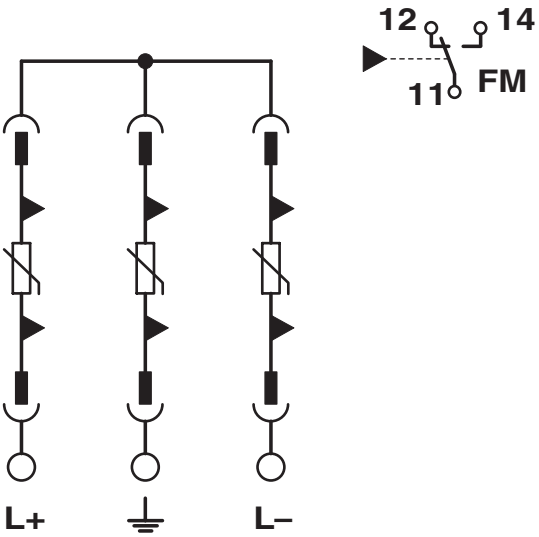

Dimensional drawing

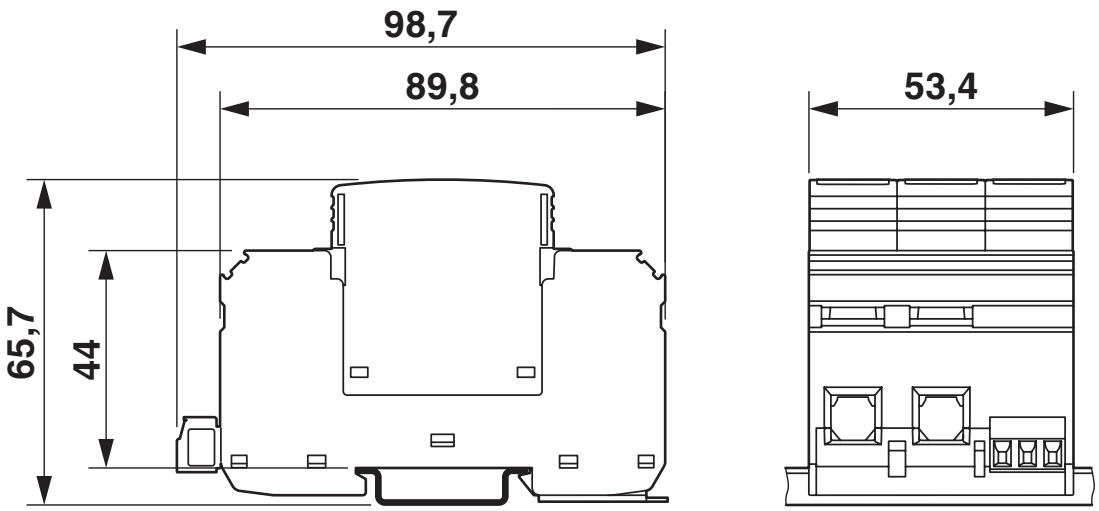

Approvals

To download certificates, visit the product detail page: https://www.phoenixcontact.com/us/products/2801164

EAC
Approval ID: RU C-DE.*09.B.00169

KEMA-KEUR
Approval ID: 71-123544 REV.2

UL Listed
Approval ID: FILE E 330181

cUL Listed
Approval ID: FILE E 330181

IECEE CB Scheme
Approval ID: NL-81006/A1

CCA
Approval ID: NTR-NL 7937

UAE-RoHS
Approval ID: 23-10-88705

cULus Listed

Classifications

ECLASS

ECLASS-11.0	27130802
ECLASS-13.0	27171401

ETIM

ETIM 9.0	EC000381

UNSPSC

UNSPSC 21.0	39121620

Environmental product compliance

EU RoHS

Fulfills EU RoHS substance requirements	Yes, No exemptions

China RoHS

Environment friendly use period (EFUP)	EFUP-E
	No hazardous substances above the limits

EU REACH SVHC

REACH candidate substance (CAS No.)	No substance above 0.1 wt%

Accessories

ZBN 18 CUS - Zack marker strip

0825059

https://www.phoenixcontact.com/us/products/0825059



Zack marker strip, can be ordered: Strip, white, labeled according to customer specifications, mounting type: snap into tall marker groove, for terminal block width: 18 mm, lettering field size: 18 x 5 mm, Number of individual labels: 5

ZBN 18,LGS:ERDE - Marker for terminal blocks

2749589

https://www.phoenixcontact.com/us/products/2749589



Marker for terminal blocks, Strip, white, labeled, horizontal: Grounding symbol, mounting type: snapped, for terminal block width: 18 mm, lettering field size: 18 x 5 mm, Number of individual labels: 5

ZBN 18,LGS:L1-N,ERDE - Marker for terminal blocks

2749576

https://www.phoenixcontact.com/us/products/2749576



Marker for terminal blocks, Strip, white, labeled, horizontal: L1, L2, L3, N, GND, mounting type: snapped, for terminal block width: 18 mm, lettering field size: 18 x 5 mm, Number of individual labels: 5

ZBN 18:UNBEDRUCKT - Zack marker strip

2809128

https://www.phoenixcontact.com/us/products/2809128



Zack marker strip, Strip, white, unlabeled, can be labeled with: CMS-P1-PLOTTER, PLOTMARK, mounting type: snapped, for terminal block width: 18 mm, lettering field size: 18 x 5 mm, Number of individual labels: 5

ATP-QTTCB - Partition plate

3206238

https://www.phoenixcontact.com/us/products/3206238

Partition plate, depth: 54 mm, width: 2 mm, height: 102 mm, color: gray



B-STIFT - Marker pen

1051993

https://www.phoenixcontact.com/us/products/1051993

Marker pen, for manual labeling of unprinted Zack strips, smear-proof and waterproof, line thickness 0.5 mm



VAL-MS-T1/T2 600DC-PV/2+V-FM - Lightning/surge arrester type 1/2

2801164

https://www.phoenixcontact.com/us/products/2801164

SZK PZ2 VDE - Screwdriver

1206463

https://www.phoenixcontact.com/us/products/1206463



Screwdriver, PZ crosshead, VDE insulated, size: PZ 2 x 100 mm, 2-component grip, with non-slip grip

VAL-MS-T1/T2 600DC-PV-ST - Type 1/2 surge protection plug

2801165

https://www.phoenixcontact.com/us/products/2801165



Replacement plug for PV arrester combinations from the VAL-MS-T1/T2 600DC-PV-... product range

Phoenix Contact 2024 © - all rights reserved
https://www.phoenixcontact.com

Phoenix Contact USA
586 Fulling Mill Road
Middletown, PA 17057, United States
(+717) 944-1300
info@phoenixcon.com