Data sheet



KHK53-PXF01700

KH53

MAGNETIC LINEAR ENCODERS

SICK
Sensor Intelligence.



Illustration may differ

Ordering information

Type	part no.
KHK53-PXF01700	1036166

Other models and accessories ➜ www.sick.com/KH53

Detailed technical data

Safety-related parameters

$MTTF_D$ (mean time to dangerous failure)	20 years (EN ISO 13849) [1]

[1] This product is a standard product and does not constitute a safety component as defined in the Machinery Directive. Calculation based on nominal load of components, average ambient temperature 40 °C, frequency of use 8760 h/a. All electronic failures are considered hazardous. For more information, see document no. 8015532.

Performance

Measuring range	0 m ... 1,700 m
Resolution	0.1 mm
Traversing speed	6.6 m/s [1]
Repeatability	0.3 mm
Measurement accuracy	± 1000 + ME (Tu-25 °C) Tk µm [2]

[1] If the max. traversing speed is exceeded or if the measuring elements are left, the corresponding error message is triggered (with SSI: FF FF FE hex).
[2] If a positional tolerance of ± 1 mm is observed relative to the nominal distance in the N and Y directions within a measuring element relative to the starting point of this element ME = length of measuring element Tu = ambient temperature in °C. Tk = coefficient of thermal expansion (28 µm/°C/m).

Interfaces

Communication interface	PROFIBUS DP [1]
Bus interface	RS-485, according to EN 50 170-2 (DIN 19245 Parts 1–3) electrically isolated by optocoupler
Position forming time	+ 1.1 ms
Address setting	0 ... 127, Hex switches or Protocol
Data protocol	PROFIBUS DP basic functions (DP-V0)
Bus termination	Via external switches
Set (electronic adjustment)	Via protocol
Encoder profile	Profile for encoders (07hex) – Class 2
Data transmission rate (baud rate)	9.6 kBaud ... 12 MBaud, Automatic detection
Status information	Operation (green LED) Bus activity (red LED)

[1] According to EN 50 170-2 (DIN 19245 Parts 1–3) electrically isolated by optocoupler.

Electronics

Initialization time	2 s
Supply voltage	10 V ... 32 V
Power consumption	2.5 W
Connection type	Male connector, 3x, M12

Mechanics

Weight	5.2 kg
Length of measuring element	See calculation example
Position tolerance	± 10 mm, see positional tolerances diagram
Read head material	AlMgSiPbF28

Ambient data

EMC	According to EN 61000-6-2 and EN 61000-6-4 [1]
Enclosure rating	IP67, with mating plug inserted (IEC 60529)
Operating temperature range	–20 °C ... +60 °C
Storage temperature range	–40 °C ... +85 °C
Resistance to shocks	30 g, 10 ms (DIN EN 60 068-2-27)
Resistance to vibration	10 g, 20 Hz ... 250 Hz (EN 60068-2-6)

[1] EMC according to the standards quoted is achieved if shielded cables are used.

Classifications

ECLASS 5.0	27270705
ECLASS 5.1.4	27270705
ECLASS 6.0	27270705
ECLASS 6.2	27270705
ECLASS 7.0	27270705
ECLASS 8.0	27270705
ECLASS 8.1	27270705
ECLASS 9.0	27270705
ECLASS 10.0	27270705
ECLASS 11.0	27270705
ECLASS 12.0	27274304
ETIM 5.0	EC002544
ETIM 6.0	EC002544
ETIM 7.0	EC002544
ETIM 8.0	EC002544
UNSPSC 16.0901	41111613

Certificates

EU declaration of conformity	✓
UK declaration of conformity	✓
ACMA declaration of conformity	✓
Moroccan declaration of conformity	✓

China-RoHS	✓
Information according to Art. 3 of Data Act (Regulation EU 2023/2854)	✓

Dimensional drawing Read head PROFIBUS

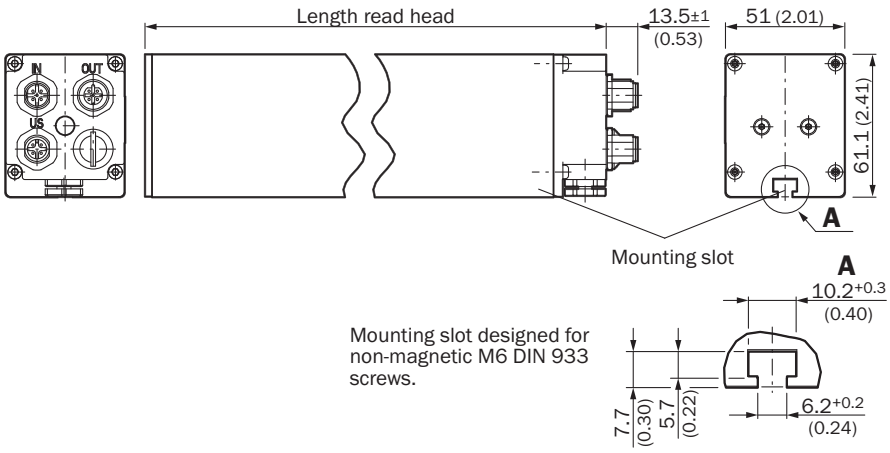

Dimensions in mm (inch)

PIN assignment PROFIBUS interface

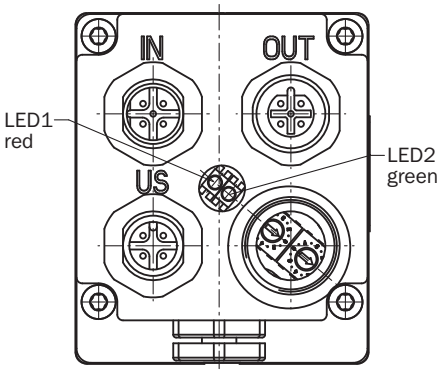

Male connector M12, 4-pin	Plug, M12, 5-pin	Female connector M12, 5-pin	Signal	Explanation
1	-	-	U_S	Supply voltage
3	-	-	GND	Ground connection
-	-	4	B	B-cable PROFIBUS DP (out)
-	-	2	A	A-cable PROFIBUS DP (out)
-	4	-	B	B-cable PROFIBUS DP (in)
-	2	-	A	A-cable PROFIBUS DP (in)
-	-	1	2P5[1)]	+ 5 V (potential free)
-	-	3	2M[1)]	0 V (potential free)
4	1	-	Not connected	-

Male connector M12, 4-pin	Plug, M12, 5-pin	Female connector M12, 5-pin	Signal	Explanation
2	3	-	Not connected	-
-	5	5	Screen	Housing potential
1)Use for external bus termination				

Position tolerance Start of measuring path

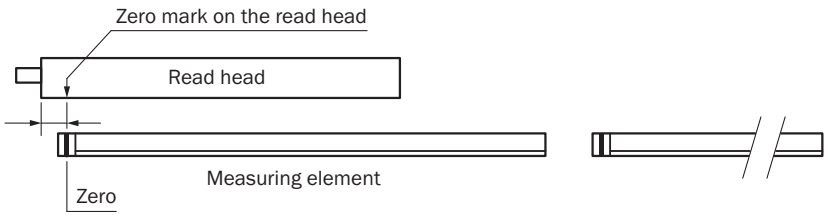

Recommended accessories

Other models and accessories ➜ www.sick.com/KH53

	Brief description	Type	part no.
Mounting systems			
	• **Description:** Mounting bracket for KH53 measuring elements • **Items supplied:** Without mounting hardware for the background	BEF-WK-KHT53	2029159
	• **Description:** Spacer for KHT53 • **Items supplied:** Without mounting hardware for the background	BEF-KHA-KHT53	2042468
programming devices			
	• **Product segment:** Programming devices • **Product family:** PGT-01-S • **Description:** Programming tool for ATM60, ATM90, and KH53 • **Items supplied:** Power supply, interface, link cable, encoder cable, and software	PGT-01-S	1030111

	Brief description	Type	part no.
connectors and cables			
	• **Connection type head A:** Flying leads • **Connection type head B:** Flying leads • **Signal type:** PROFIBUS DP • **Items supplied:** By the meter • **Cable:** 2-wire, PUR • **Description:** PROFIBUS DP, shielded	LTG-2102-MW	6021355
	• **Connection type head A:** Female connector, M12, 4-pin, straight, A-coded • **Description:** Unshielded • **Connection systems:** Screw-type terminals • **Permitted cross-section:** ≤ 0.75 mm²	DOS-1204-G	6007302
	• **Connection type head A:** Female connector, M12, 5-pin, straight, B-coded • **Signal type:** PROFIBUS DP • **Description:** PROFIBUS DP, shielded • **Connection systems:** Screw-type terminals • **Permitted cross-section:** ≤ 0.75 mm²	DOS-1205-GQ	6021353
	• **Connection type head A:** Male connector, M12, 5-pin, straight, B-coded • **Signal type:** PROFIBUS DP • **Description:** PROFIBUS DP, shielded • **Connection systems:** Screw-type terminals • **Permitted cross-section:** ≤ 0.75 mm²	STE-1205-GQ	6021354
	• **Connection type head A:** Male connector, M12, 4-pin, straight, B-coded • **Signal type:** PROFIBUS DP • **Description:** PROFIBUS DP, terminal resistor	STE-END-Q	6021156
	• **Connection type head A:** Female connector, M12, 5-pin, straight, B-coded • **Connection type head B:** Flying leads • **Signal type:** Fieldbus, PROFIBUS DP • **Cable:** 30 m, 2-wire, PUR, halogen-free • **Description:** Fieldbus, twisted pair, shieldedPROFIBUS DP • **Connection systems:** Flying leads • **Application:** Zones with oils and lubricants	DOL-1205-G30MQ	6032639
	• **Connection type head A:** Female connector, M12, 5-pin, straight, B-coded • **Connection type head B:** Flying leads • **Signal type:** Fieldbus, PROFIBUS DP • **Cable:** 50 m, 2-wire, PUR, halogen-free • **Description:** Fieldbus, twisted pair, shieldedPROFIBUS DP • **Connection systems:** Flying leads • **Application:** Zones with oils and lubricants	DOL-1205-G50MQ	6032861
	• **Connection type head A:** Female connector, M12, 4-pin, straight, A-coded • **Connection type head B:** Flying leads • **Signal type:** Sensor/actuator cable • **Cable:** 5 m, 4-wire, PVC • **Description:** Sensor/actuator cable, unshielded • **Application:** Zones with chemicals, Uncontaminated zones	YF2A14-050VB3XLEAX	2096235
	• **Connection type head A:** Male connector, M12, 2-pin, straight, B-coded • **Connection type head B:** Flying leads • **Signal type:** Fieldbus, PROFIBUS DP • **Cable:** 15 m, 2-wire, PUR, halogen-free • **Description:** Fieldbus, shieldedPROFIBUS DP • **Application:** Drag chain operation, Zones with oils and lubricants	YM2B22-150P-B1XLEAX	2106276
	• **Connection type head A:** Male connector, M12, 2-pin, straight, B-coded • **Connection type head B:** Flying leads • **Signal type:** Fieldbus, PROFIBUS DP • **Cable:** 5 m, 2-wire, PUR, halogen-free • **Description:** Fieldbus, shieldedPROFIBUS DP • **Application:** Drag chain operation, Zones with oils and lubricants	YM2B22-050P-B1XLEAX	2106270
	• **Connection type head A:** Male connector, M12, 2-pin, straight, B-coded • **Connection type head B:** Flying leads • **Signal type:** Fieldbus, PROFIBUS DP • **Cable:** 10 m, 2-wire, PUR, halogen-free • **Description:** Fieldbus, shieldedPROFIBUS DP	YM2B22-100P-B1XLEAX	2106271

	Brief description	Type	part no.
	• **Application:** Drag chain operation, Zones with oils and lubricants		
	• **Connection type head A:** Female connector, M12, 2-pin, straight, B-coded • **Connection type head B:** Flying leads • **Signal type:** Fieldbus, PROFIBUS DP • **Cable:** 10 m, 2-wire, PUR, halogen-free • **Description:** Fieldbus, shieldedPROFIBUS DP • **Application:** Drag chain operation, Zones with oils and lubricants	YF2B22-100P-B1XLEAX	2106269
	• **Connection type head A:** Female connector, M12, 2-pin, straight, B-coded • **Connection type head B:** Flying leads • **Signal type:** Fieldbus, PROFIBUS DP • **Cable:** 15 m, 2-wire, PUR, halogen-free • **Description:** Fieldbus, shieldedPROFIBUS DP • **Application:** Drag chain operation, Zones with oils and lubricants	YF2B22-150P-B1XLEAX	2106272
	• **Connection type head A:** Female connector, M12, 2-pin, straight, B-coded • **Connection type head B:** Flying leads • **Signal type:** Fieldbus, PROFIBUS DP • **Cable:** 20 m, 2-wire, PUR, halogen-free • **Description:** Fieldbus, shieldedPROFIBUS DP • **Application:** Drag chain operation, Zones with oils and lubricants	YF2B22-200P-B1XLEAX	2106273
	• **Connection type head A:** Female connector, M12, 2-pin, straight, B-coded • **Connection type head B:** Flying leads • **Signal type:** Fieldbus, PROFIBUS DP • **Cable:** 5 m, 2-wire, PUR, halogen-free • **Description:** Fieldbus, shieldedPROFIBUS DP • **Application:** Drag chain operation, Zones with oils and lubricants	YF2B22-050P-B1XLEAX	2121936
Linear encoders			
	• **System part:** Measuring element • **Measuring range:** 0 m ... 1,700 m • **Code type:** Coded	KHT53-XXX01700	1030085
	• **System part:** Measuring element • **Measuring range:** 0 m ... 1,700 m • **Code type:** Universal configurable	KHU53-XXX01700	1030086
	• **System part:** Mounting gauge • **Measuring range:** 0 m ... 1,700 m	KHM53-XXX01700	1030087

SICK AT A GLANCE

SICK is one of the leading manufacturers of intelligent sensors and sensor solutions for industrial applications. A unique range of products and services creates the perfect basis for controlling processes securely and efficiently, protecting individuals from accidents and preventing damage to the environment.

We have extensive experience in a wide range of industries and understand their processes and requirements. With intelligent sensors, we can deliver exactly what our customers need. In application centers in Europe, Asia and North America, system solutions are tested and optimized in accordance with customer specifications. All this makes us a reliable supplier and development partner.

Comprehensive services complete our offering: SICK LifeTime Services provide support throughout the machine life cycle and ensure safety and productivity.

For us, that is “Sensor Intelligence.”

WORLDWIDE PRESENCE:

Contacts and other locations –www.sick.com