# SAC-5P-P12MS/ 0,6-PUR/P12FR SH - Sensor/actuator cable

1476908

https://www.phoenixcontact.com/us/products/1476908

Please be informed that the data shown in this PDF document is generated from our online catalog. Please find the complete data in the user documentation. Our general terms of use for downloads are valid.



Sensor/actuator cable, 5-position, PUR halogen-free, black-gray RAL 7021, shielded (Tinned copper braided shield), Advanced Shielding Technology, Plug straight M12 Push Pull, coding: A, on Socket angled M12 Push Pull, coding: A, cable length: 0.6 m

## Your advantages

- Easy and safe: 100 % electrically tested plug-in components
- Reliable signal transmission – 360° shielding in environments with electromagnetic interference

## Commercial data

| | |
|---|---|
| Item number | 1476908 |
| Packing unit | 1 pc |
| Minimum order quantity | 1 pc |
| Sales key | BF06 |
| Product key | BF1CKE |
| GTIN | 4063151891466 |
| Weight per piece (including packing) | 67.2 g |
| Weight per piece (excluding packing) | 22.22 g |
| Customs tariff number | 85444290 |
| Country of origin | PL |

# Technical data

## Product properties

| | |
|---|---|
| Product type | Sensor/actuator cable |
| Application | Standard |
| Number of positions | 5 |
| No. of cable outlets | 1 |
| Shielded | yes |
| Coding | A |

### Insulation characteristics

| | |
|---|---|
| Overvoltage category | II |
| Degree of pollution | 3 |

## Material specifications

| | |
|---|---|
| Flammability rating according to UL 94 | V0 |
| Outer sheath, material | PUR |
| Conductor material | Bare Cu litz wires |

## Electrical properties

| | |
|---|---|
| Insulation resistance | ≥ 100 MΩ |
| Nominal voltage $U_N$ | 48 V AC |
| | 60 V DC |
| Nominal current $I_N$ | 4 A |
| Max. conductor resistance | 58 Ω/km |

## Mechanical properties

### Mechanical data

| | |
|---|---|
| Insertion/withdrawal cycles | ≥ 100 |
| Max. bending cycles | 10000000 |

## Signaling

| | |
|---|---|
| Status display | No |
| Status display present | No |

## Connection data

### Connection technology

| | |
|---|---|
| Connection method | Push-Pull |

### Conductor connection

| | |
|---|---|
| Connection method | Push-Pull |

## Connector

Connection 1

| | |
|---|---|
| Type | Plug straight M12 Push Pull |
| Number of positions | 5 |
| Locking type | Push Pull |
| Coding type | A |

Connection 2

| | |
|---|---|
| Type | Socket angled M12 Push Pull |
| Number of positions | 5 |
| Locking type | Push Pull |
| Coding type | A |

## Cable/line

| | |
|---|---|
| Cable length | 0.6 m |

PUR halogen-free black [PUR]

| | |
|---|---|
| Dimensional drawing | 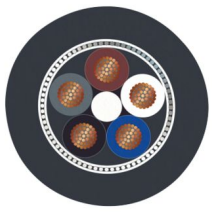 |
| Cable weight | 43 kg/km |
| UL AWM Style | 20549 / 10493 (80°C/300 V) |
| Number of positions | 5 |
| Shielded | yes |
| Cable type | PUR halogen-free black [PUR] |
| Conductor structure signal line | 42x 0.10 mm |
| AWG signal line | 22 |
| Conductor cross section | 5x 0.34 mm² (Signal line) |
| Wire diameter incl. insulation | 1.27 mm ±0.02 mm (Signal line) |
| External cable diameter | 5.25 mm ±0.2 mm |
| Outer sheath, material | PUR |
| External sheath, color | black-gray RAL 7021 |
| Conductor material | Bare Cu litz wires |
| Material wire insulation | PP |
| Single wire, color | brown, white, blue, black, gray |
| Thickness, insulation | ≥ 0.21 mm |
| Thickness, outer sheath | approx. 0.50 mm |
| Overall twist | 5 wires around filler to the core |
| Optical shield covering | 80 % |
| Max. conductor resistance | max. 57 Ω/km (at 20 °C) |

| | |
|---|---|
| Insulation resistance | 70 GΩ*km (at 20 °C) |
| Nominal voltage, cable | 300 V (at 20 °C) |
| Test voltage Core/Core | 3000 V (at 20 °C) |
| Smallest bending radius, fixed installation | 26 mm |
| Smallest bending radius, movable installation | 52 mm (up to +60 °C) |
| Max. bending cycles | 10000000 |
| Halogen-free | in accordance with DIN VDE 0472 part 815 |
| | in accordance with DIN EN 50267-2-1 |
| Flame resistance | in accordance with UL 758/1581 FT2 |
| | DIN EN 60332-2-2 (20 s) |
| Resistance to oil | in accordance with DIN EN 60811-2-1 |
| Other resistance | Highly resistant to acids, alkaline solutions and solvents |
| | hydrolysis and microbe resistant |
| | Resistant to salt water |
| | partly UV-resistant (in accordance with DIN EN ISO 4892-2-A) |
| | abrasion-resistant |
| Special properties | Flexible cable conduit capable |
| | Silicone-free |
| | Free of substances which would hinder coating with paint or varnish |
| | Low adhesion surface |
| Ambient temperature (operation) | -40 °C ... 80 °C (cable, fixed installation) |
| | -25 °C ... 80 °C (Cable, flexible installation) |

## Environmental and real-life conditions

### Ambient conditions

| | |
|---|---|
| Degree of protection | IP65 |
| | IP67 |
| Ambient temperature (operation) | -25 °C ... 85 °C (Plug / socket) |
| | -40 °C ... 80 °C (cable, fixed installation) |
| | -25 °C ... 80 °C (Cable, flexible installation) |

## Standards and regulations

| | |
|---|---|
| Standard designation | M12-Push-Pull |
| Standards/specifications | IEC 61076-2-010 |

## Drawings

Dimensional drawing

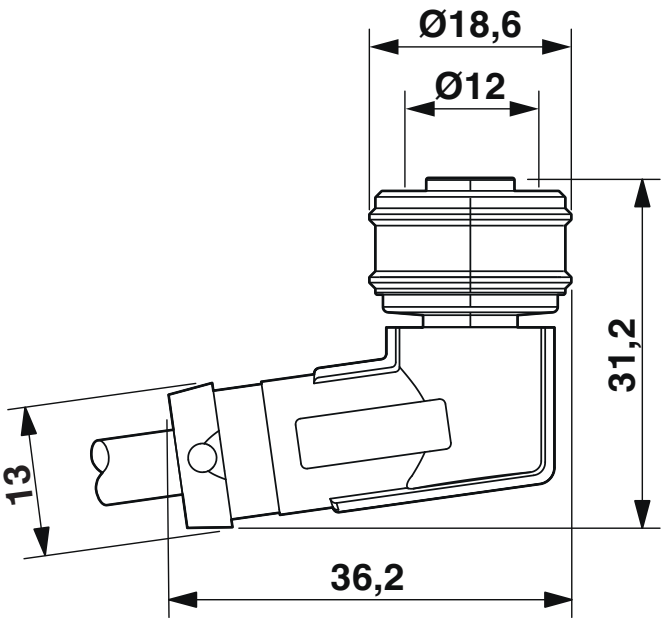


M12 push-pull female, angled, shielded

Circuit diagram

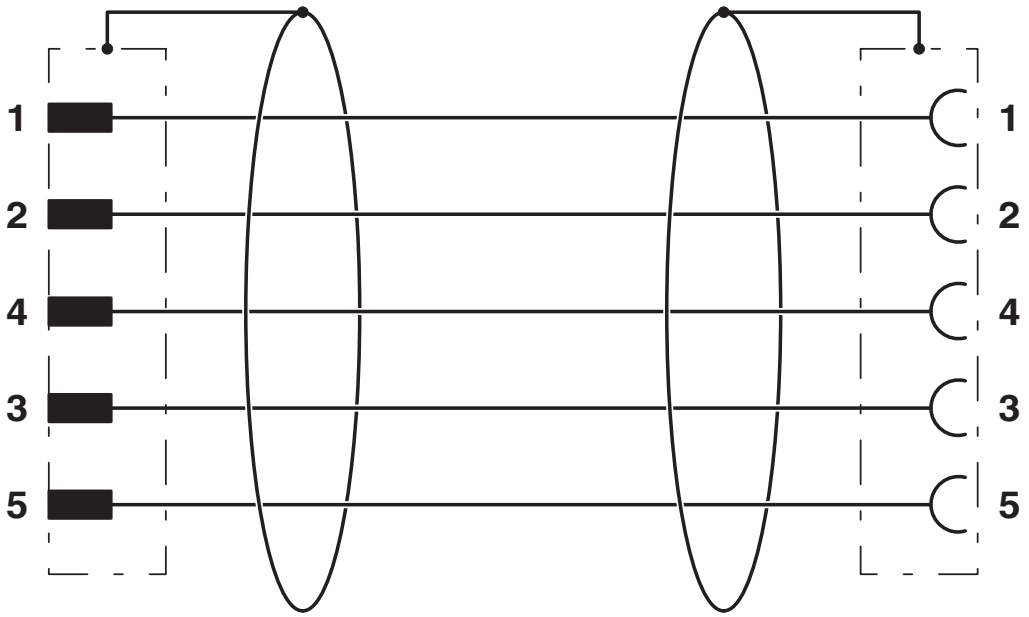

Schematic diagram

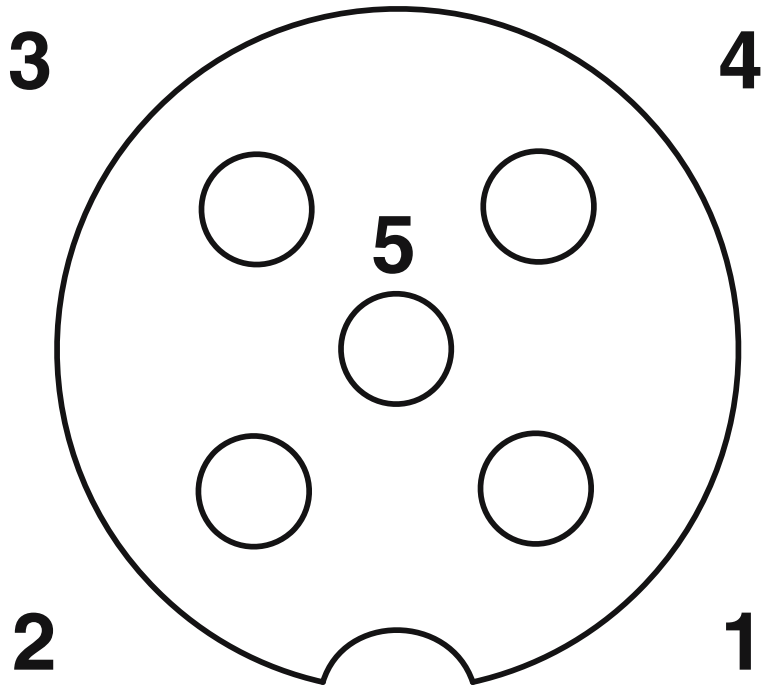


Pin assignment M12 socket, 5-pos., A-coded, socket side view

Dimensional drawing

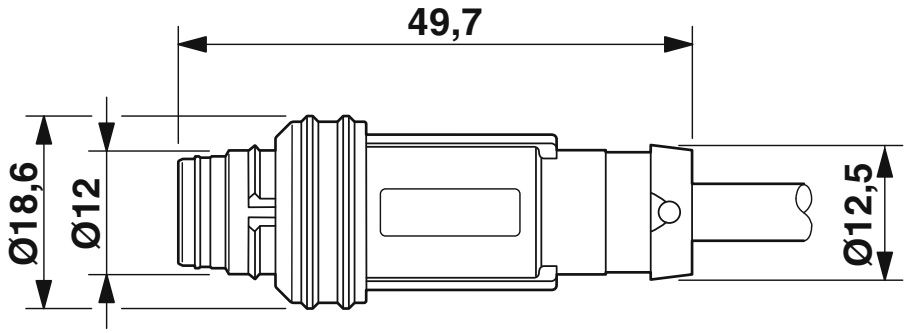


M12 push-pull plug, straight, shielded

Schematic diagram

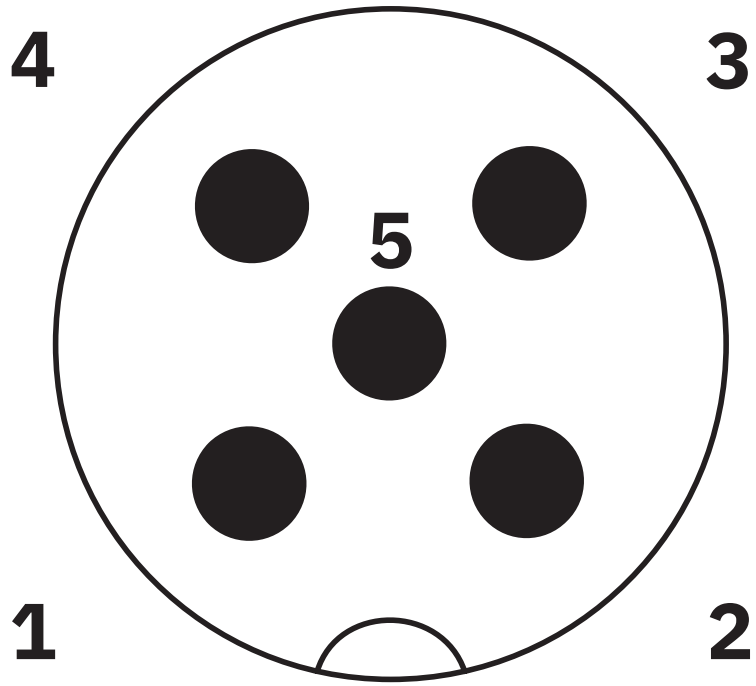


Pin assignment M12 male connector, 5-pos., A-coded, male side

## Classifications

### ECLASS

| | |
|---|---|
| ECLASS-11.0 | 27060311 |
| ECLASS-12.0 | 27060311 |
| ECLASS-13.0 | 27060311 |

### ETIM

| | |
|---|---|
| ETIM 9.0 | EC001855 |

## Environmental product compliance

EU RoHS

| | |
|---|---|
| Fulfills EU RoHS substance requirements | Yes, No exemptions |

China RoHS

| | |
|---|---|
| Environment friendly use period (EFUP) | EFUP-E |
| | No hazardous substances above the limits |

EU REACH SVHC

| | |
|---|---|
| REACH candidate substance (CAS No.) | No substance above 0.1 wt% |


Phoenix Contact 2024 © - all rights reserved
https://www.phoenixcontact.com



Phoenix Contact USA
586 Fulling Mill Road
Middletown, PA 17057, United States
(+717) 944-1300
info@phoenixcon.com