Data sheet | Item number: 2636-3108/020-000

PCB terminal block; 16 mm²; Pin spacing 10 mm; 8-pole; Push-in CAGE CLAMP®; 16,00 mm²; gray

www.wago.com/2636-3108/020-000

Picture differs from the item.

Color:

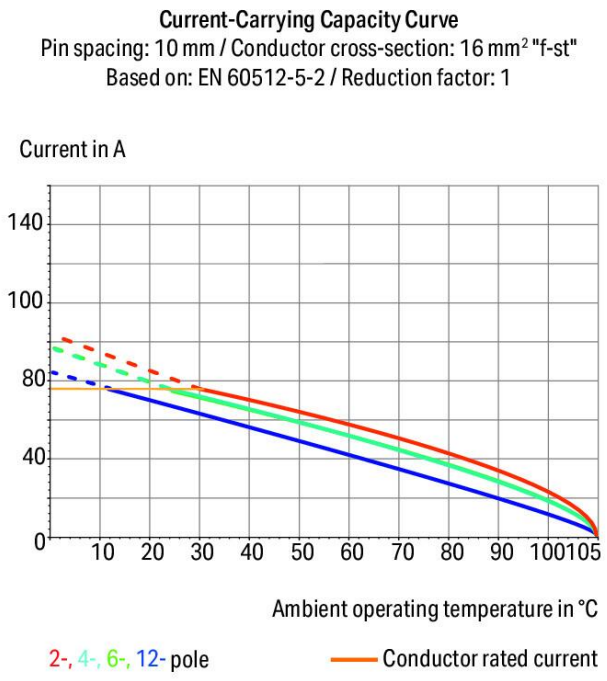

Subject to changes. Please also observe the further product documentation!

WAGO GmbH & Co. KG
Hansastr. 27
32423 Minden
Phone: +49571 887-0 | Fax: +49571 887-169
Email: info.de@wago.com | Web: www.wago.com

Do you have any questions about our products?
We are always happy to take your call at +49 (571) 887-44222.

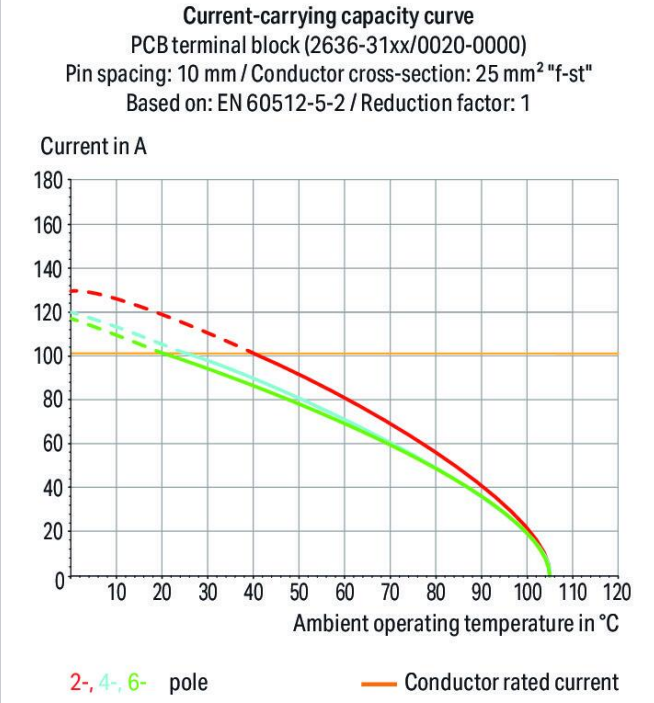

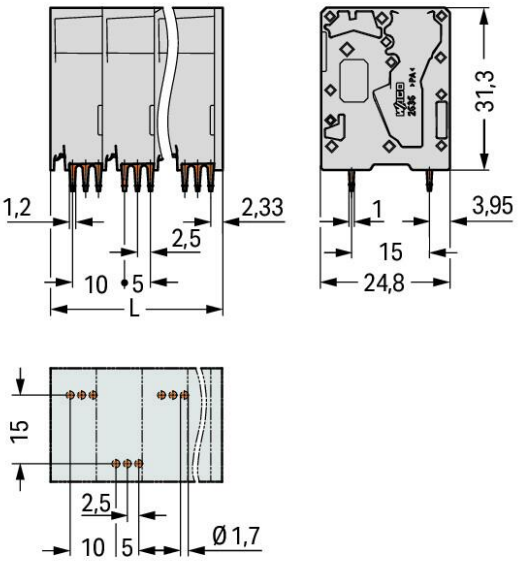

Dimensions in mm
L = (pole no. – 1) x pin spacing + 11.6 mm

Item description

- PCB terminal strips with Push-in CAGE CLAMP® connection
- Push-in termination of solid and ferruled conductors
- Ideal for panel feedthrough applications via operation parallel to conductor entry
- Testing can be performed both parallel and perpendicular to conductor entry

Data

Notes

Variants:	Other pole numbers Direct marking Other colors Other versions (or variants) can be requested from WAGO Sales or configured at https://configurator.wago.com/.

Electrical data

Subject to changes. Please also observe the further product documentation!

WAGO GmbH & Co. KG
Hansastr. 27
32423 Minden
Phone: +49571 887-0 | Fax: +49571 887-169
Email: info.de@wago.com | Web: www.wago.com

Do you have any questions about our products?
We are always happy to take your call at +49 (571) 887-44222.

Ratings per IEC/EN

Ratings per	IEC/EN 60664-1
Nominal voltage (III/3)	1000 V
Rated impulse voltage (III/3)	8 kV
Rated voltage (III/2)	1000 V
Rated impulse voltage (III/2)	8 kV
Nominal voltage (II/2)	1000 V
Rated surge voltage (II/2)	8 kV
Rated current	76 A
Legend (ratings)	(III / 2) ≙ Overvoltage category III / Pollution degree 2

Ratings per UL

Rated voltage UL (Use Group B)	600 V
Rated current UL (Use Group B)	66 A
Rated voltage UL (Use Group C)	600 V
Rated current UL (Use Group C)	66 A

Ratings per CSA

Approvals per	CSA
Rated voltage CSA (Use Group B)	600 V
Rated current CSA (Use Group B)	66 A
Rated voltage CSA (Use Group C)	600 V
Rated current CSA (Use Group C)	66 A

Connection data

Connection points	8
Total number of potentials	8
Number of connection types	1
Number of levels	1

Connection 1

Connection technology	Push-in CAGE CLAMP®
Actuation type	Operating tool
Solid conductor	0.75 … 16 mm² / 18 … 4 AWG
Fine-stranded conductor	0.75 … 25 mm² / 18 … 4 AWG

Subject to changes. Please also observe the further product documentation!

WAGO GmbH & Co. KG
Hansastr. 27
32423 Minden
Phone: +49571 887-0 | Fax: +49571 887-169
Email: info.de@wago.com | Web: www.wago.com

Do you have any questions about our products?
We are always happy to take your call at +49 (571) 887-44222.

Fine-stranded conductor; with insulated ferrule	0.75 … 16 mm²
Fine-stranded conductor; with uninsulated ferrule	0.75 … 16 mm²
Fine-stranded conductor; with twin ferrule	0.75 … 6 mm²
Strip length	18 … 20 mm / 0.71 … 0.79 inches
Conductor connection direction to PCB	90 °
Pole number	8

Physical data

Pin spacing	10 mm / 0.394 inches
Width	81.6 mm / 3.213 inches
Height	35.3 mm / 1.39 inches
Height from the surface	31.3 mm / 1.232 inches
Depth	24.8 mm / 0.976 inches
Solder pin length	4 mm
Solder pin dimensions	1.2 x 1 mm
Drilled hole diameter with tolerance	$1.7\ ^{(+0.1)}$ mm

Mechanical data

Mounting type	Feed-through mounting

PCB contact

PCB contact	THT
Solder pin arrangement	over the entire terminal strip (staggered)
Number of solder pins per potential	3

Material data

Note (material data)	Information on material specifications can be found here
Color	gray
Material group	I
Insulation material	Polyamide (PA66)
Flammability class per UL94	V0
Clamping spring material	Chrome-nickel spring steel (CrNi)
Contact material	Electrolytic copper (E_{Cu})
Contact plating	Tin

Subject to changes. Please also observe the further product documentation!

WAGO GmbH & Co. KG
Hansastr. 27
32423 Minden
Phone: +49571 887-0 | Fax: +49571 887-169
Email: info.de@wago.com | Web: www.wago.com

Do you have any questions about our products?
We are always happy to take your call at +49 (571) 887-44222.

Weight	64.3 g

Environmental requirements

Limit temperature range	-60 … +105 °C
Processing temperature	-35 … +60 °C
Continuous operating temperature	-60 … +105 °C

Commercial data

eCl@ss 10.0	27-44-04-01
eCl@ss 9.0	27-44-04-01
ETIM 8.0	EC002643
ETIM 7.0	EC002643
ECCN	NO DATA
PU (SPU)	20 pcs
Packaging type	box
Country of origin	DE
GTIN	4055143625609
Customs tariff number	85369010000

Environmental Product Compliance

RoHS Compliance Status	Compliant,No Exemption

Approvals / Certificates

General approvals

Logo	Approval	Additional Approval Text	Certificate name
	CB DEKRA Certification B.V.	EN 60947-7-4	NL-61617
	CSA DEKRA Certification B.V.	C22.2	70154737
	cURus Underwriters Laboratories Inc.	C22.2 No. 158	E45172
	KEMA/KEUR DEKRA Certification B.V.	EN 60947-7-4	71-110774

Subject to changes. Please also observe the further product documentation!

WAGO GmbH & Co. KG
Hansastr. 27
32423 Minden
Phone: +49571 887-0 | Fax: +49571 887-169
Email: info.de@wago.com | Web: www.wago.com

Do you have any questions about our products?
We are always happy to take your call at +49 (571) 887-44222.

Optional accessories

Ferrule

Ferrule		
	Item no.: 216-210 Ferrule; Sleeve for 16 mm² / AWG 6; insulated; electro-tin plated; electrolytic copper; gastight crimped; acc. to DIN 46228, Part 4/09.90; blue	www.wago.com/216-210
	Item no.: 216-286 Ferrule; Sleeve for 2.5 mm² / AWG 14; insulated; electro-tin plated; electrolytic copper; gastight crimped; acc. to DIN 46228, Part 4/09.90; blue	www.wago.com/216-286
	Item no.: 216-287 Ferrule; Sleeve for 4 mm² / AWG 12; insulated; electro-tin plated; electrolytic copper; gastight crimped; acc. to DIN 46228, Part 4/09.90; gray	www.wago.com/216-287
	Item no.: 216-288 Ferrule; Sleeve for 6 mm² / AWG 10; insulated; electro-tin plated; electrolytic copper; gastight crimped; acc. to DIN 46228, Part 4/09.90; yellow	www.wago.com/216-288
	Item no.: 216-289 Ferrule; Sleeve for 10 mm² / AWG 8; insulated; electro-tin plated; electrolytic copper; gastight crimped; acc. to DIN 46228, Part 4/09.90; red	www.wago.com/216-289

Tool

Operating tool		
	Item no.: 210-721 Operating tool; Blade: 5.5 x 0.8 mm; with a partially insulated shaft; multicoloured	www.wago.com/210-721

Downloads

Documentation

Additional Information

Technical Section Technical explanations	2019 年4月3日	pdf 2.1 MB	Download

CAD/CAE-Data

PCB Design

Symbol and Footprint via Ultra Librarian 2636-3108/020-000	URL	Download

Subject to changes. Please also observe the further product documentation!

WAGO GmbH & Co. KG
Hansastr. 27
32423 Minden
Phone: +49571 887-0 | Fax: +49571 887-169
Email: info.de@wago.com | Web: www.wago.com

Do you have any questions about our products?
We are always happy to take your call at +49 (571) 887-44222.

CAx data for your PCB design, consisting of "schematic symbols and PCB footprints", allow easy integration of the WAGO component into your development environment.

Supported formats:

- Accel EDA 14 & 15
- Altair
- Altium 6 to current version
- Autodesk Fusion 360
- Cadence Allegro
- DesignSpark
- Eagle Libraries
- KiCad
- Mentor Graphics
- BoardStation
- Mentor Graphics Design Architect
- Mentor Graphics Design
- Expedition 99 and 2000
- OrCAD 9.X PCB and Capture
- PADS PowerPCB 3, 3.5, 4.X, and 5.X
- PADS PowerPCB and PowerLogic 3.0
- PCAD 2000, 2001, 2002, 2004, and 2006
- Pulsonix 8.5 or newer
- STL
- 3D STEP
- TARGET 3001!
- View Logic ViewDraw
- Quadcept
- Zuken CadStar 3 and 4
- Zuken CR-5000 and CR-8000
- Zuken eCADSTAR 2020 and 2021Zuken CR-5000 and CR-8000

PCB Component Libraries (EDA), PCB CAD Library Ultra Librarian

Symbol and Footprint via SamacSys 2636-3108/020-000	URL	Download

CAx data for your PCB design, consisting of "schematic symbols and PCB footprints", allow easy integration of the WAGO component into your development environment.

Supported formats:

—

WAGO GmbH & Co. KG
Hansastr. 27
32423 Minden
Phone: +49571 887-0 | Fax: +49571 887-169
Email: info.de@wago.com | Web: www.wago.com

Do you have any questions about our products?
We are always happy to take your call at +49 (571) 887-44222.

- 3D (stp)
- Altium
- CADSTAR
- Capture
- CircuitStudio
- CR-5000
- CR-8000
- DEHDL
- DesignSpark PCB
- DesignSpark PCB PRO
- DipTrace
- EAGLE
- Easy-PC
- EasyEDA
- eCADSTAR
- KiCad
- OrCAD_Allegro16
- PADS
- Proteus
- Pulsonix
- Quadcept
- SOLIDWORKS PCB
- TARGET 3001!
- xDX Designer
- Xpedition

PCB Component Libraries (EDA), PCB CAD Library SamacSys Electronic Component Search Engine

CAE data

ZUKEN Portal 2636-3108/020-000	URL	Download

CAD data

2D/3D Models 2636-3108/020-000	URL	Download

Asset Administration Shell

Asset Administration Shell 2636-3108/020-000	URL	Download

Subject to changes. Please also observe the further product documentation!

WAGO GmbH & Co. KG
Hansastr. 27
32423 Minden
Phone: +49571 887-0 | Fax: +49571 887-169
Email: info.de@wago.com | Web: www.wago.com

Do you have any questions about our products?
We are always happy to take your call at +49 (571) 887-44222.

Environmental Product Compliance

Compliance Search

Environmental Product Compliance 2636-3108/020-000 PCB terminal block; 16 mm²; Pin spacing 10 mm; 8-pole; Push-in CAGE CLAMP®; 16,00 mm²; gray	URL	Download

Installation Notes

Conductor termination

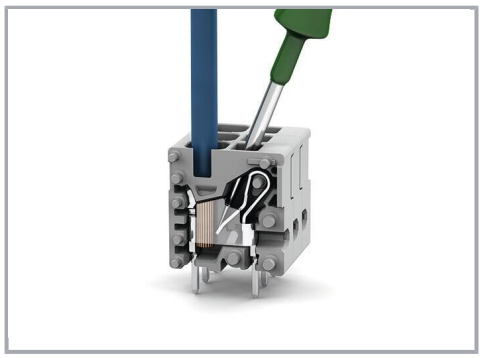

Insert fine-stranded conductors and remove all conductor types via operating tool.

Conductor termination

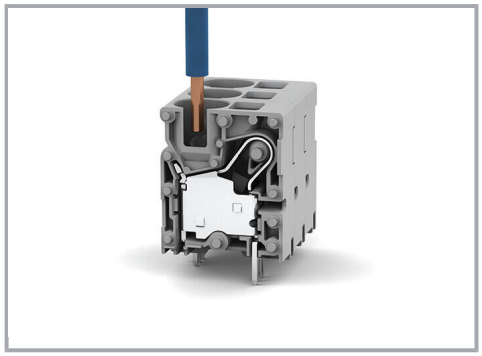

Insert solid conductors via push-in termination.

WAGO GmbH & Co. KG
Hansastr. 27
32423 Minden
Phone: +49571 887-0 | Fax: +49571 887-169
Email: info.de@wago.com | Web: www.wago.com

Do you have any questions about our products?
We are always happy to take your call at +49 (571) 887-44222.