Product data sheet

Specifications



Circuit breaker, LA, 350A, 2 pole, 600VAC, 22kA, 250VDC, 10kA, lugs, thermal magnetic

LAL26350

Product availability: Non-Stock - Not normally stocked in distribution facility

Main

Product or Component Type	Circuit breaker
Trip Unit Technology	Thermal-magnetic

Complementary

Line Rated Current	350 A
Number of Poles	2P
Mounting Mode	Unit mount
Magnetic Hold Current	1750 A
Magnetic Tripping Current	3500 A
Electrical connection	Lugs, load Lugs, line
Terminal identifier	AL400LA
Tightening torque	115.06 lbf.in (13 N.m) 0.07…0.5 in² (42…304 mm²) (AWG 1...600 kcmil) 115.06 lbf.in (13 N.m) 0.07…0.2 in² (42…127 mm²) (AWG 1...250 kcmil)
Height	11 in (279.4 mm)
Width	6 in (152.4 mm)
Depth	5.84 in (148.34 mm)
Circuit breaker application	HACR rated

Environment

Certifications	IEC CSA UL Listed

Ordering and shipping details

Category	US10DE200935
Discount Schedule	0DE2
GTIN	785901426486
Returnability	Yes
Country of origin	MX

Packing Units

Unit Type of Package 1	PCE
Nbr. of units in pkg.	1

Price is “List Price” and may be subject to a trade discount – check with your local distributor or retailer for actual price.

Disclaimer: This documentation is not intended as a substitute for and is not to be used for determining suitability or reliability of these products for specific user applications

Package 1 Height	9.10 in (23.114 cm)
Package 1 Width	11.50 in (29.21 cm)
Package 1 Length	17.40 in (44.196 cm)
Package weight(Lbs)	14.1 lb(US) (6.4 kg)

Contractual warranty

Warranty	18 months

Environmental Data

Schneider Electric aims to achieve Net Zero status by 2050 through supply chain partnerships, lower impact materials, and circularity via our ongoing “Use Better, Use Longer, Use Again” campaign to extend product lifetimes and recyclability.

Environmental Data explained >

How we assess product sustainability >

Environmental footprint

Environmental Disclosure	Product Environmental Profile

Use Better

Materials and Substances

Packaging made with recycled cardboard	Yes
Packaging without single use plastic	Yes
EU RoHS Directive	Compliant with Exemptions
SCIP Number	45160aaa-1457-439f-bca7-7bd5246ac23e
REACh Regulation	REACh Declaration
California proposition 65	WARNING: This product can expose you to chemicals including: DINP, which is known to the State of California to cause cancer, and DIDP, which is known to the State of California to cause birth defects or other reproductive harm. For more information go to www.P65Warnings.ca.gov
Halogen content performance	Halogen free plastic parts product
PVC free	Yes

Use Again

Repack and remanufacture

Circularity Profile	No need of specific recycling operations
Take-back	No

Technical Illustration

Dimensions

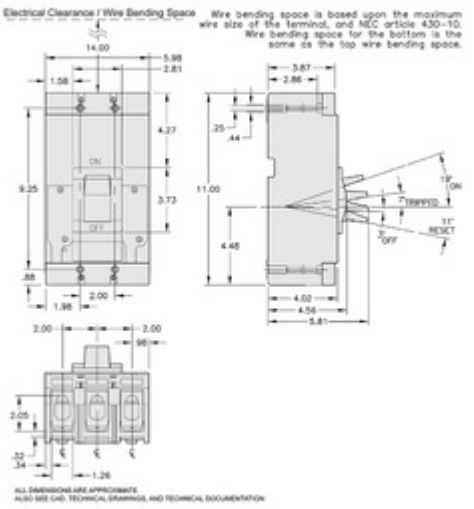

Image of product / Alternate images

Alternative

