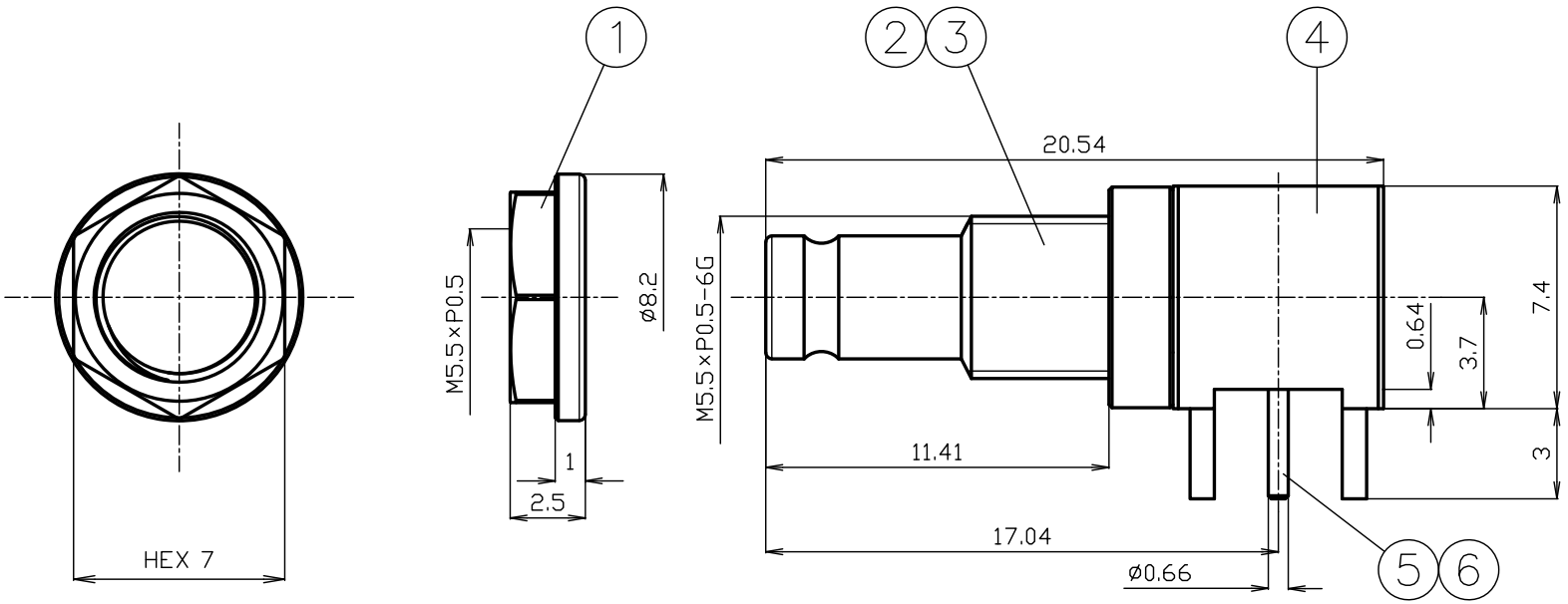

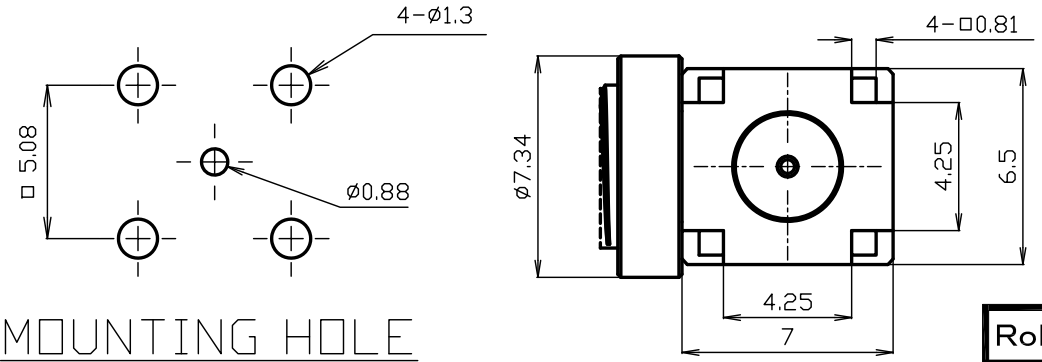

MOUNTING HOLE

RoHS Compliant Cd ≦75ppm

REMARKS	BRASS: Cd ≦75ppm PHOSPHOR BRONZE: Pb <4wt%

※1 : BERYLLIUM COPPER

NO.	DESCRIPTION	MATERIAL	Q'TY	FINISH	REMARK
7					
6	INSULATOR B	PTFE	1	--	
5	CENTER PIN	※1	1	Au	
4	BODY B	BRASS	1	Au	
3	BODY A	BRASS	1	Au	
2	INSULATOR A	PTFE	1	--	
1	NUT	BRASS	1	Ni	

SCALE 4/1

UNIT mm

DATE 2022.08.25

DRAWN	CHECKED	APPROVED	CONFIRMATION
渡邉 '22,08,25 直弘	檜 '22,08,25 澤	山 '22,08,25 本	三 '22,08,25 村

PROJECTION

株式会社トーコネ TO-CONNE CO.,LTD.

PART NUMBER

1.0/2.3-LBR-PCB-75

DRAWING NO. W-1036128

GKQM-16

PRODUCT SPECIFICATION

Part number：1.0/2.3-LBR-PCB-75 No. 1032436

Drawing number：W-1036128

Nominal 1 Standard IEC 61169-29
2 Voltage rating AC 250V
3 Frequency range 3.2GHz
4 Impedance 75Ω
5 Operating temperature range -40°C～+85°C

株式会社トーコネ
TO-CONNE CO.,LTD.

		Test Items	Procedures/Test Method	Requirements
1	STRUCTURE	Design and Construction	Specified on relevant product drawing (Drawing number: W-1036128)	No defects or abnormalities
2		Materials		
3		Finish		
4	ELECTRICAL	Insulation Resistance	DC 500V	1000 MΩ (Min.)
5		Withstand voltage	1 minute at AC 750V	No defects or abnormalities
6		Contact resistance	The method of which, the voltage drop of the contact duration should not exceed about 1-kHz AC or 1mV DC	Between inner conductors 4mΩ (Max.)
				Between outer conductors 2.5mΩ (Max.)
7	MECHANICAL	Compatibility	Mating with connector complying with the standard	No defects or abnormalities
8		Centre contact captivation	An axial movement with a pulling force of 10N (min) applied	No defects or abnormalities
9		Retention force of socket centre contact	0.2N (min) retained with a standard test gauge	No defects or abnormalities
10		Recommended nut torque	2.0N･m(Max.)	
11		Soldering conditions	Soldering iron temperature at 370°C ± 5°C, 5 secondson each leg	No defects or abnormalities

	REVISIONS	DATE
1		
2		

Confirmation	Approved	Checked	Prepared
三村 22.08.26	山本 22.08.26	檜澤 22.08.26	渡邉直弘 '22,08,26

GKQM-7