MPQ1918

100V, High-Frequency, Half-Bridge GaN/MOSFET Driver, AEC-Q100 Qualified

DESCRIPTION

The MPQ1918 is designed to drive enhancement mode Gallium Nitride (GaN) FETs or N-channel MOSFETs with a low gate threshold voltage in a half-bridge or synchronous application.

The MPQ1918 features independent high-side (HS) and low-side (LS) pulse-width modulation (PWM) inputs. It also provides a bootstrap technique for the HS driver voltage, and can operate up to 100V. The new charging technology prevents the HS driver voltage from exceeding the VCC voltage (V_{CC}), which prevents the gate voltage from exceeding the GaN FET's maximum gate-to-source voltage rating.

The MPQ1918 has two separate gate outputs, allowing the turn-on and turn-off capabilities to be independently adjusted by adding an impedance to the gate loop. The MPQ1918 can operate up to several MHz.

The MPQ1918 is available in a FCQFN-14 (3mmx3mm) package with wettable flanks.

FEATURES

- Independent High-Side (HS) and Low-Side (LS) TTL Logic Inputs
- HS Floating Biased Voltage Rail Operates Up to $100V_{DC}$
- Separate Gate Outputs for Adjustable Turn-On and Turn-Off Capabilities
- Internal Bootstrap Switch Supply Voltage Clamping
- 3.7V to 5.5V VCC Voltage (V_{CC}) Range
- 0.27Ω / 1.2Ω Pull-Down/Pull-Up Resistance
- Fast Propagation Times
- Excellent Propagation Delay Matching (Typically 1.5ns)
- Available in an FCQFN-14 (3mmx3mm) Package with Wettable Flanks
- Available in AEC-Q100 Grade 1

APPLICATIONS

- Half-Bridge and Full-Bridge Converters
- Audio Class-D Amplifiers
- Synchronous Buck Converters
- Power Modules

All MPS parts are lead-free, halogen-free, and adhere to the RoHS directive. For MPS green status, please visit the MPS website under Quality Assurance. "MPS", the MPS logo, and "Simple, Easy Solutions" are trademarks of Monolithic Power Systems, Inc. or its subsidiaries.

TYPICAL APPLICATION

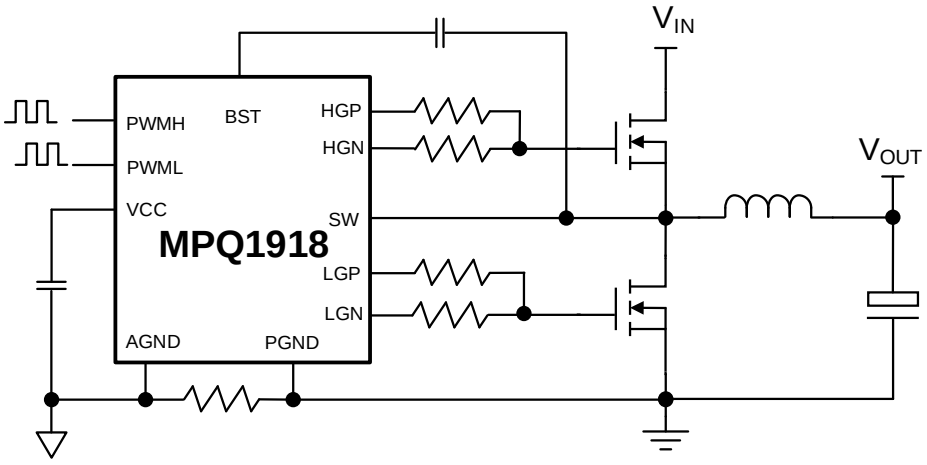

MPS Proprietary Information. Patent Protected. Unauthorized Photocopy and Duplication Prohibited.
© 2023 MPS. All Rights Reserved.

ORDERING INFORMATION

Part Number*	Package	Top Marking	MSL Rating
MPQ1918GQE-AEC1	FCQFN-14 (3mmx3mm)	*See Below*	1

* For Tape & Reel, add suffix -Z (e.g. MPQ1918GQE-AEC1-Z).

TOP MARKING

BRTY
LLLL

BRT: Product code
Y: Year
LLLL: Lot number

PACKAGE REFERENCE

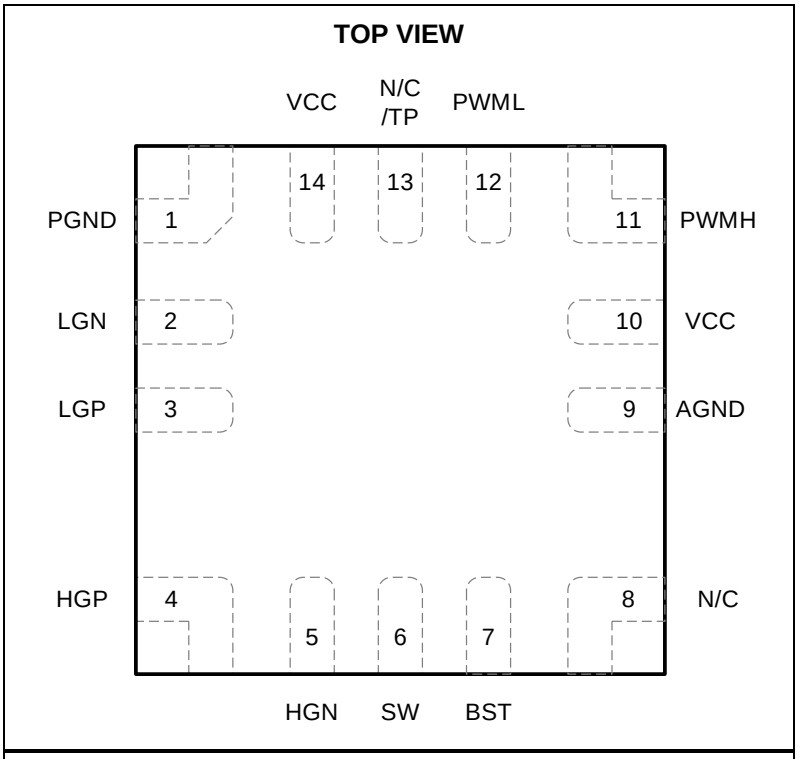

FCQFN-14 (3mmx3mm) with Wettable Flanks

MPS Proprietary Information. Patent Protected. Unauthorized Photocopy and Duplication Prohibited.
© 2023 MPS. All Rights Reserved.

PIN FUNCTIONS

Pin #	Name	Description
1	PGND	**Power ground.**
2	LGN	**Low-side (LS) gate driver sink current output.** Connect the LGN pin to the gate of the low-side MOSFET (LS-FET) with a short or a resistor to adjust the turn-off speed.
3	LGP	**LS gate driver source current output.** Connect the LGP pin to the LS-FET's gate with a short or a resistor to adjust the turn-on speed.
4	HGP	**High-side (HS) gate driver source current output.** Connect the HGP pin to the gate of the high-side MOSFET (HS-FET) with a short or a resistor to adjust the turn-on speed.
5	HGN	**HS gate driver sink current output.** Connect the HGN pin to the HS-FET's gate with a short or a resistor to adjust the turn-off speed.
6	SW	**Switching node**. The SW pin is the HS-FET's source connection and the bootstrap capacitor's negative terminal.
7	BST	**HS gate driver bootstrap rail.** Place a capacitor between the BST and SW pins, and as close as possible to the pins.
8	N/C	**No connection.**
9	AGND	**IC signal ground.**
10	VCC	**5V driver supply.** Place an low ESL/ESR MLCC decoupling capacitor from VCC to GND.
11	PWMH	**HS driver pulse-width modulation (PWM) input**
12	PWML	**LS driver PWM input**
13	N/C/TP	**No connection.**
14	VCC	**5V driver supply.** Place a low-ESL/ESR MLCC decoupling capacitor from the VCC pin to GND.

MPS Proprietary Information. Patent Protected. Unauthorized Photocopy and Duplication Prohibited.
© 2023 MPS. All Rights Reserved.

ABSOLUTE MAXIMUM RATINGS (1)

Supply voltage (V_{CC}) (DC).....-0.3V to +6.5V
Supply voltage (V_{CC}) (25ns).....-0.3V to +8V
V_{BST-SW} (DC).....-0.3V to +6.5V
V_{BST-SW} (25ns) .....-0.3V to +8V
V_{SW} (DC) .....-0.3V to +105V
V_{SW} (20ns) .....-5V to +108V
$V_{BST-GND}$.....-0.3V to V_{SW} + 6.5V
V_{HGP}, V_{HGN}..... SW - 0.3V to V_{BST} + 0.3V
V_{LGP}, V_{LGN}.....-0.3V to V_{CC} + 0.3V
PWMH, PWML.....-0.3V to +6.5V
Junction temperature.....150°C
Lead temperature .....260°C
Storage temperature.....-65°C to +150°C

ESD Ratings

Human body model (HBM) .....±2000V
Charge device model (CDM) .....±2000V

Recommended Operating Conditions (2)

Supply voltage (V_{CC}).....4.5V to 5.5V
PWMH, PWML.....0V to 5.5V
SW.....-5V to +100V
BST.....V_{SW} + 4V to V_{SW} + 5.5V
Operating junction temp (T_J)….-40°C to +125°C

Thermal Resistance (3) θ_{JA} θ_{JC}

QFN-14 (3mmx3mm)	55.5	3.4	°C/W

Notes:

1) Exceeding these ratings may damage the device.
2) The device is not guaranteed to function outside of its operating conditions.
3) Measured on a JESD51-7, 4-layer PCB. The value of θ_{JA} given in this table is only valid for comparison with other packages and cannot be used for design purposes. These values were calculated in accordance with JESD51-7, and simulated on a specified JEDEC board. They do not represent the performance obtained in an actual application.

MPS Proprietary Information. Patent Protected. Unauthorized Photocopy and Duplication Prohibited.
© 2023 MPS. All Rights Reserved.

ELECTRICAL CHARACTERISTICS

V_{CC} = 5V, T_A = 25°C for typical values and T_J = -40°C to +150°C for min/max values, unless otherwise noted.

Parameter	Symbol	Condition	Min	Typ	Max	Units
VCC Supply						
Quiescent current	I_Q	PWMH = PWML = 0		110	170	µA
Operation current	I_{CC}	No load on HGP and HGN or LGP and LGN, f_{SW} = 500kHz		1	2	mA
V_{CC} under-voltage lockout (UVLO) rising threshold	VCC_{VTH}		3.7	4.1	4.5	V
V_{CC} UVLO hysteresis	VCC_{HYS}			350		mV
Pulse-Width Modulation (PWM) Inputs						
PWM logic high voltage	V_{H_PWM}		1.7	1.9		V
PWM threshold hysteresis	V_{HYS_PWM}			400		mV
PWM logic low voltage	V_{L_PWM}			1.5	1.6	V
PWM input pull-down resistance	R_{PWM_IN}		100	200	300	kΩ
High-Side (HS) Driver Supply						
V_{BST-SW} UVLO rising threshold	$VBST_{VTH}$		80%	86%	92%	V_{CC}
V_{BST-SW} UVLO hysteresis	$VBST_{VTH_HYS}$			7%		V_{CC}
Bootstrap Function						
Dynamic resistance	R_{BST_RES}		2	4	6	Ω
BST to SW clamp voltage	V_{BST_CLAMP}	$V_{BST_CLAMP} = V_{BST} – V_{SW}$		106%		V_{CC}
HS and Low-Side (LS) Gate Driver						
Peak source current (4)	I_{SOURCE}	V_{HGP-SW} = 2V, V_{LGP-LS} = 2V		1.6		A
Peak sink current (4)	I_{SINK}	V_{HGN-SW} = 2V, V_{LGN-LS} = 2V		5		A
Source resistance	R_{SOURCE}	I_{SOURCE} = 100mA		1.2	2	Ω
Sink resistance	R_{SINK}	I_{SINK} = 100mA		0.27	0.5	Ω
HS and LS Gate Driver Timing Characteristics						
HGP rising time (0.5V to 4.5V) (4)	t_{R_SW}	1nF load		5		ns
HGL falling time (4.5V to 0V) (4)	t_{F_SW}	1nF load		3		ns
LGP rising time (0.5V to 4.5V) (4)	t_{R_LS}	1nF load		5		ns
LGN falling time (4.5V to 0.5V) (4)	t_{F_LS}	1nF load		3		ns

MPS Proprietary Information. Patent Protected. Unauthorized Photocopy and Duplication Prohibited.
© 2023 MPS. All Rights Reserved.

ELECTRICAL CHARACTERISTICS

V_{CC} = 5V, T_A = 25°C for typical values and T_J = -40°C to +150°C for min/max values, unless otherwise noted.

Parameter	Symbol	Condition	Min	Typ	Max	Units
HGP turn-on propagation delay	t_{HPH}	1nF load, PWMH rising to HGP rising		20	30	ns
HGN turn-off propagation delay	t_{HPL}	1nF load, PWMH falling to HGN falling		20	30	ns
LGP turn-on propagation delay	t_{LPH}	1nF load, PWML rising to LGP rising		20	30	ns
LGN turn-off propagation delay	t_{LPL}	1nF load, PWML falling to LGN falling		20	30	ns
LGP on and HGN off delay matching	t_{OFF_M}			1.5	6	ns
LGN off and HGP on delay matching	t_{ON_M}			1.5	6	ns
Minimal input PWM pulse (4)	t_{PWM_MIN}			10		ns
Minimal gate output pulse (4)	t_{GATE_MIN}			15		ns
Thermal Protection						
Thermal shutdown (4)	T_{SD}			170		°C
Thermal shutdown hysteresis (4)	T_{SD_HYS}			30		°C

Note:

4) Guaranteed by design or characterization data, not tested in production.

MPS Proprietary Information. Patent Protected. Unauthorized Photocopy and Duplication Prohibited.
© 2023 MPS. All Rights Reserved.

TIMING DIAGRAMS

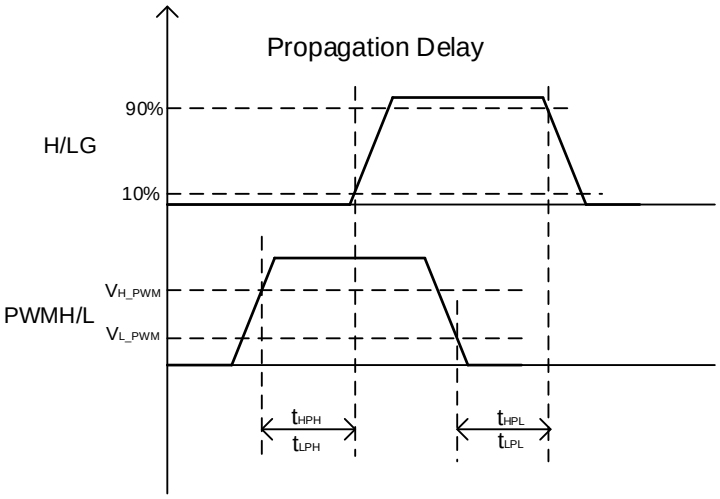

Figure 1: Propagation Delay

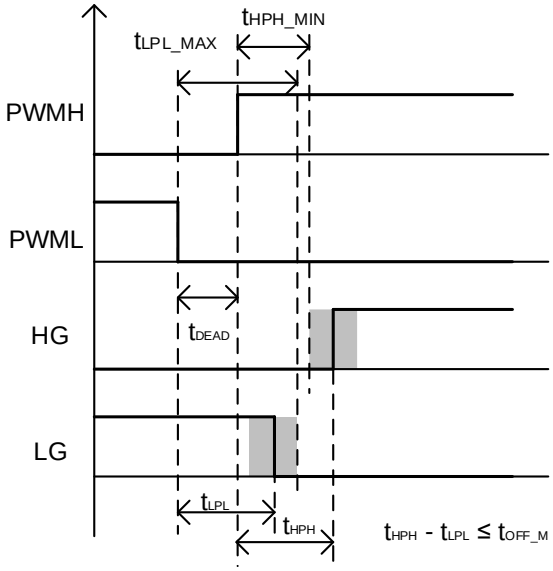

Figure 2: Propagation Delay Matching

MPS Proprietary Information. Patent Protected. Unauthorized Photocopy and Duplication Prohibited.
© 2023 MPS. All Rights Reserved.

TYPICAL CHARACTERISTICS

V_{CC} = 5V, T_A = 25°C, unless otherwise noted.

Operation Current vs. Frequency

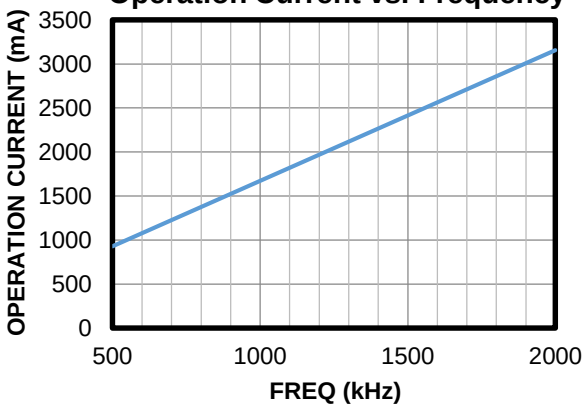

Operation Current vs. Temperature

Freq = 500kHz

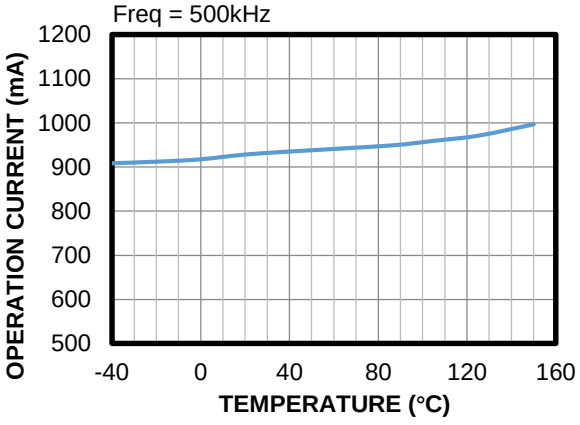

VCC Quiescent Current vs. Temperature

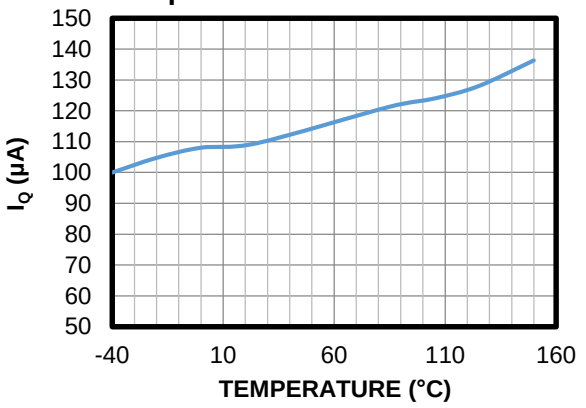

V_{CC} UVLO Threshold vs. Temperature

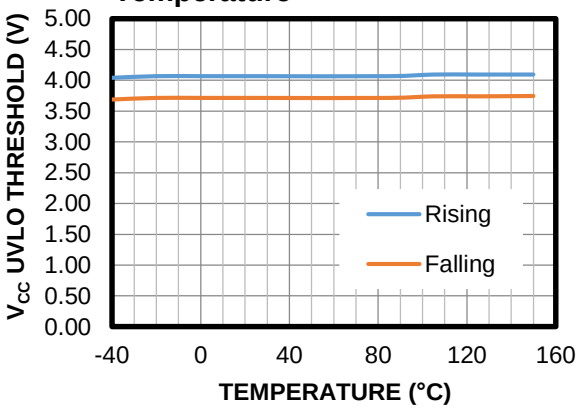

BST to SW UVLO Threshold vs. Temperature

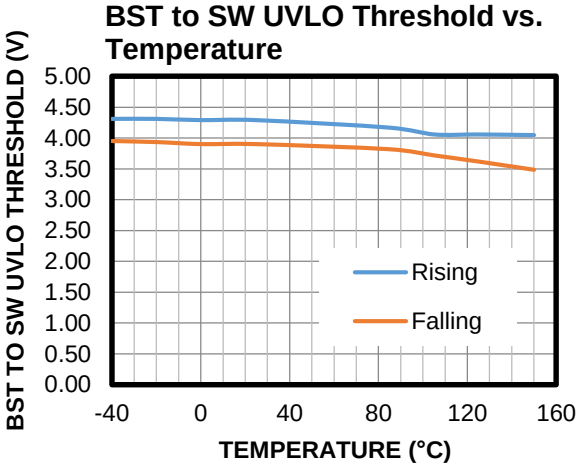

R_{BST} vs. Temperature

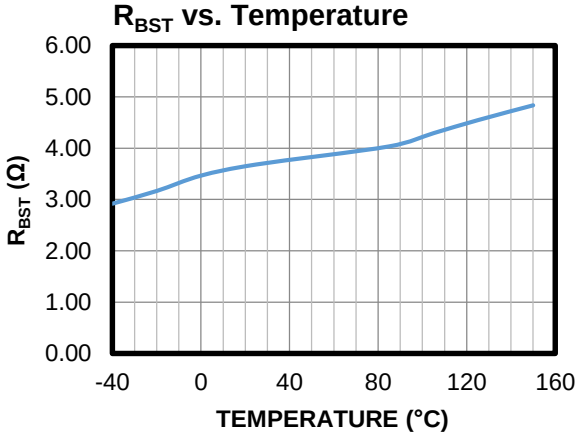

MPS Proprietary Information. Patent Protected. Unauthorized Photocopy and Duplication Prohibited.
© 2023 MPS. All Rights Reserved.

TYPICAL CHARACTERISTICS *(continued)*

V_{CC} = 5V, T_A = 25°C, unless otherwise noted.

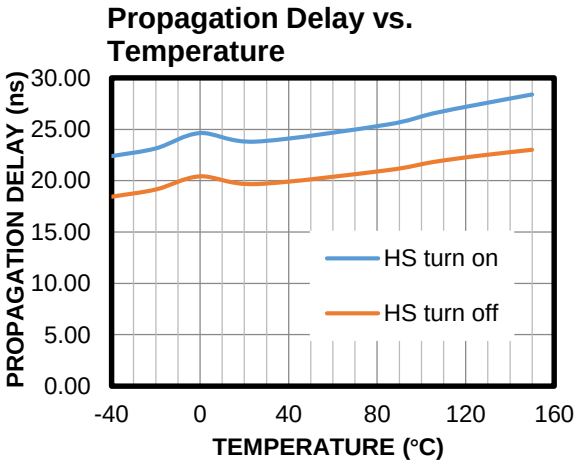

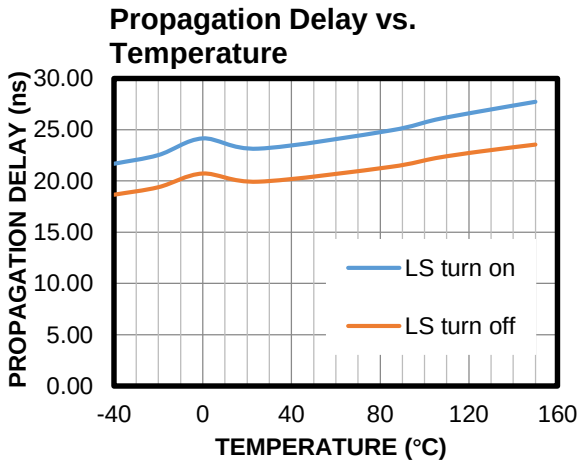

MPS Proprietary Information. Patent Protected. Unauthorized Photocopy and Duplication Prohibited.
© 2023 MPS. All Rights Reserved.

TYPICAL CHARACTERISTICS *(continued)*

Performance curves and waveforms are tested on the evaluation board, f_{SW} = 1MHz, L = 2.2µH, T_A = 25°C, unless otherwise noted.

Steady State

V_{IN} = 48V, V_{OUT} = 12V, I_{OUT} = 2A

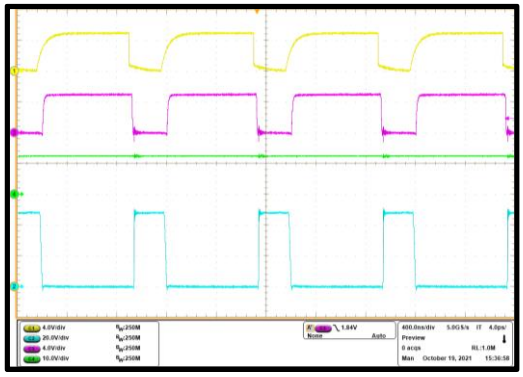

400ns/div.

LG Start-Up Propagation Delay

V_{IN} = 0V, V_{CC} = 5V

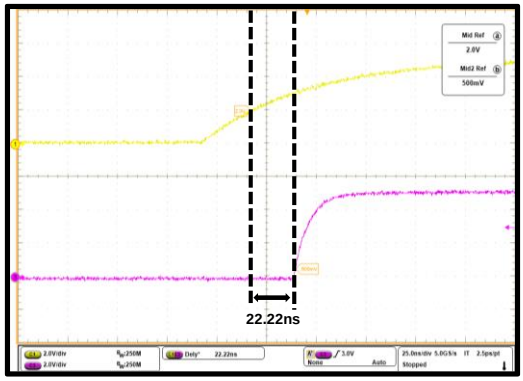

25ns/div.

LG Shutdown Propagation Delay

V_{IN} = 0V, V_{CC} = 5V

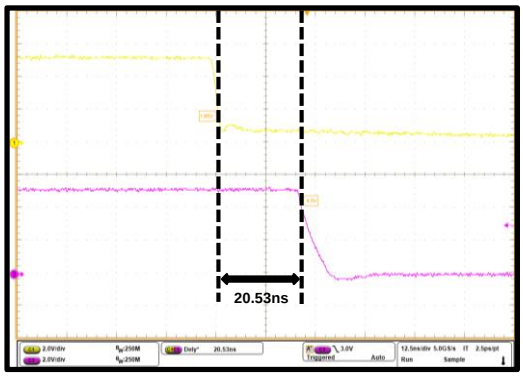

12.5ns/div.

HG Start-Up Propagation Delay

V_{IN} = 0V, V_{CC} = 5V

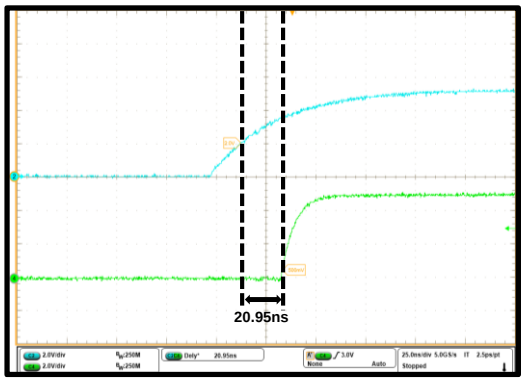

25ns/div.

HG Shutdown Propagation Delay

V_{IN} = 0V, V_{CC} = 5V

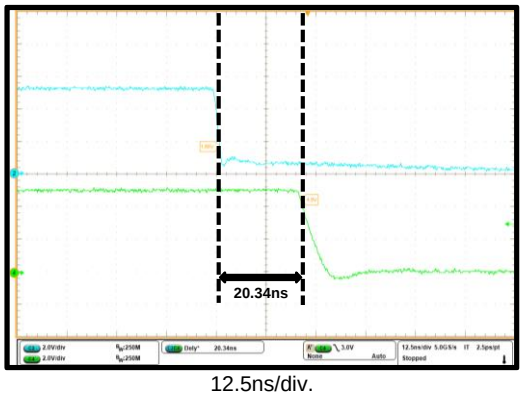

12.5ns/div.

MPS Proprietary Information. Patent Protected. Unauthorized Photocopy and Duplication Prohibited.
© 2023 MPS. All Rights Reserved.

FUNCTIONAL BLOCK DIAGRAM

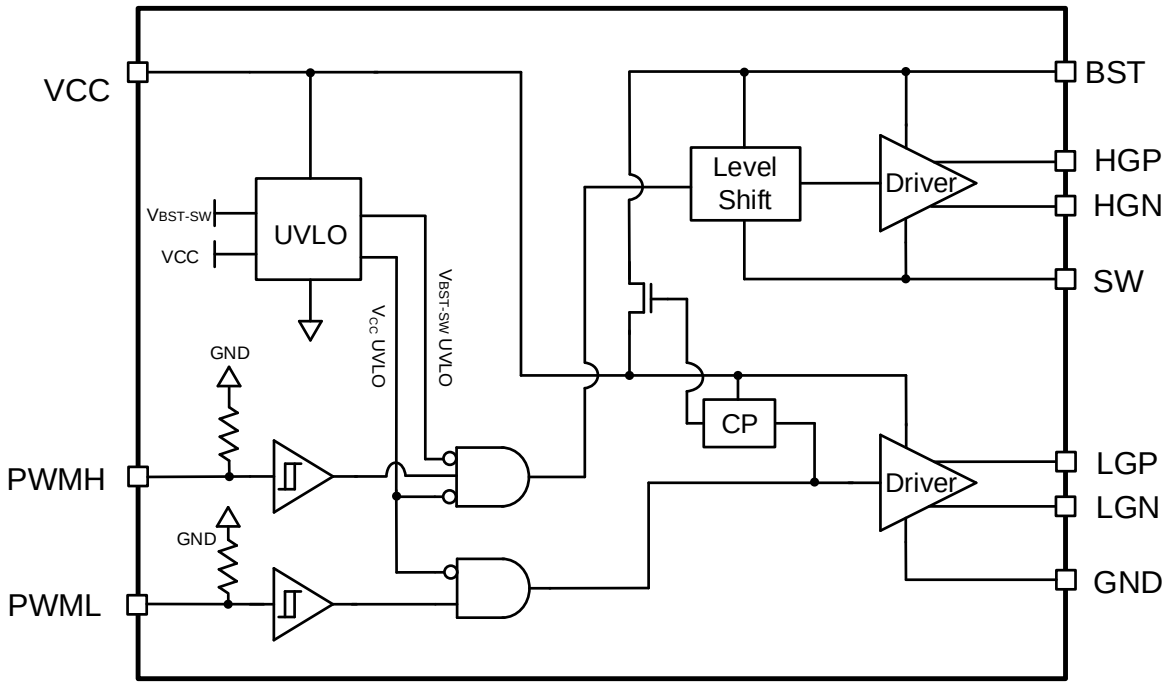

Figure 3: Functional Block Diagram

MPS Proprietary Information. Patent Protected. Unauthorized Photocopy and Duplication Prohibited.
© 2023 MPS. All Rights Reserved.

OPERATION

The MPQ1918 is designed to drive both high-side (HS) and low-side (LS) enhancement mode GaN FETs or N-channel MOSFETs. The floating HS bias voltage can support a bus voltage up to $100V_{DC}$. The new bootstrap (BST) charging technology prevents the HS driver voltage from exceeding the VCC voltage (V_{CC}), which prevents the gate voltage from exceeding the GaN FET's maximum gate-to-source voltage rating.

PWM Input and Output

The PWMH and PWML pins are logical inputs that can be independently controlled and withstand voltages up to 5.5V. The input PWM can be floated if it is not used. If both PWMH and PWML control the high-side MOSFETs (HS-FETs) and low-side MOSFETs (LS-FETs) of the same bridge, then they prevent shoot-through by setting a sufficient dead time between PWMH and PWML (see Figure 4).

The output's pull-down and pull-up resistance are optimized for enhancement mode GaN FETs to achieve high frequency and efficient operation. The 0.27Ω pull-down resistance provides a robust, low-impedance turn-off path to eliminate an accidental turn-on due to a high dV/dt or dI/dt. The 1.2Ω pull-up resistance reduces the switch node voltage's ringing and overshoot.

Figure 4 shows the timing for the dead time.

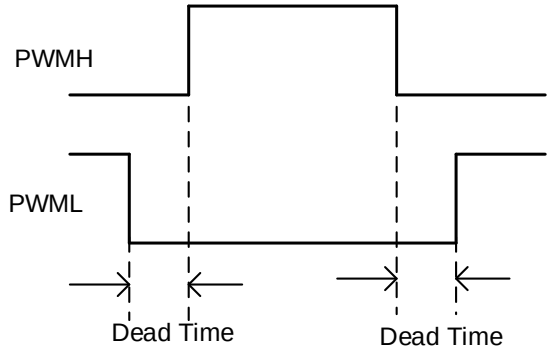

Figure 4: Dead Time Timing

The separate gate outputs means that the MPQ1918 can add different gate loop resistors to adjust the turn-on and turn-off speeds.

Table 1 shows a truth table between the inputs and outputs.

Table 1: HG and LG Truth Table

PWMH	PWML	HGP	HGN	LGP	LGN
High	Low	High	Open	Open	Low
Low	High	Open	Low	High	Open
High	High	High	Open	High	Open
Low	Low	Open	Low	Open	Low

Under-Voltage Lockout (UVLO)

The MPQ1918 employs both V_{CC} and V_{BST-SW} under-voltage lockout (UVLO).

When V_{CC} is below its UVLO threshold (VCC_{VTH}), both PWMH and PWML are ignored.

When the BST-SW voltage (V_{BST-SW}) is below its UVLO threshold ($VBST_{VTH}$), PWMH is ignored and the HG pulls low, but the LG responds with PWML.

When V_{BST-SW} > $VBST_{VTH}$ and V_{CC} > VCC_{VTH}, both HG and LG work. Table 2 on page 13 shows the UVLO PWM distribution logic, where "0" means low and "1" means high.

MPS Proprietary Information. Patent Protected. Unauthorized Photocopy and Duplication Prohibited.
© 2023 MPS. All Rights Reserved.

Table 2: V_{CC} and V_{BST-SW} UVLO PWM Distribution Logic

V_{CC} Condition	V_{BST-SW} Condition	PWMH	PWML	HG	LG
VCC < VCC_{VTH}	Any	1	0	0	0
		0	1	0	0
		1	1	0	0
		0	0	0	0
VCC > VCC_{VTH}	V_{BST-SW} < $VBST_{VTH}$	1	0	0	0
		0	1	0	1
		1	1	0	1
		0	0	0	0
	V_{BST-SW} > $VBST_{VTH}$	1	0	1	0
		0	1	0	1
		1	1	1	1
		0	0	0	0

Bootstrap (BST) Clamping

Due to the intrinsic feature of the enhancement mode GaN FETs, the source-to-drain voltage of the low-side MOSFET (LS-FET) typically exceeds the diode's forward voltage drop when the gate pulls low. This causes a negative voltage on the SW pin. Moreover, the negative voltage transient on SW can be significantly high, depending on the layout and the parasitic inductances of the device's drain and source.

When the high-side driver uses the floating bootstrap configuration, a negative SW voltage can lead to an excessive bootstrap voltage, which can damage the HS GaN FET.

The MPQ1918 employs a new charging logic only when PWML = 1. In this scenario, V_{BST-SW} charges from V_{CC}. There is no current path from VCC to BST when PWML = 0, so V_{BST-SW} is always below V_{CC}. In addition, the electrostatic discharge (ESD) between BST and SW also clamps V_{BST-SW} such that it does not exceed 6V.

MPS Proprietary Information. Patent Protected. Unauthorized Photocopy and Duplication Prohibited.
© 2023 MPS. All Rights Reserved.

APPLICATION INFORMATION

PCB Layout Guidelines

Efficient PCB layout is critical for stable operation. For the best results, refer to Figure 5 and follow the guidelines below:

1. Place the MPQ1918 as close as possible to the GaN FETs to reduce the loop inductance and minimize noise.
2. Divide the pins of the MPQ1918 into three blocks according to their functions.
   a. PWMH/L and VCC (pin 10) refer to the AGND.
   b. LGP/N and VCC (pin 14) refer to the PGND.
   c. HGP/N and BST refer to the SW.
3. Place a 0Ω resistor between AGND and PGND in the bottom layer.
4. Low-ESR/ESL bypass capacitors must be connected as close as possible to the MPQ1918 (between the VCC and GND pins, and between the BST and SW pins) to support the high peak current being drawn from VCC when the GaN/MOSFETs turn on.
5. Use a Kelvin connection between the MPQ1918 and GaN FETs to minimize the common source inductance.

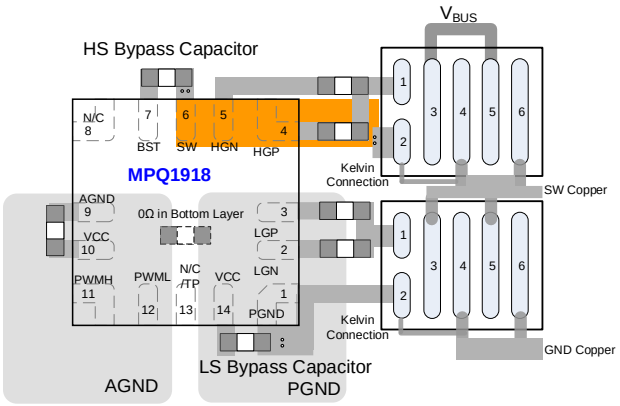

Figure 5: Recommended PCB Layout

MPS Proprietary Information. Patent Protected. Unauthorized Photocopy and Duplication Prohibited.
© 2023 MPS. All Rights Reserved.

TYPICAL APPLICATION CIRCUIT

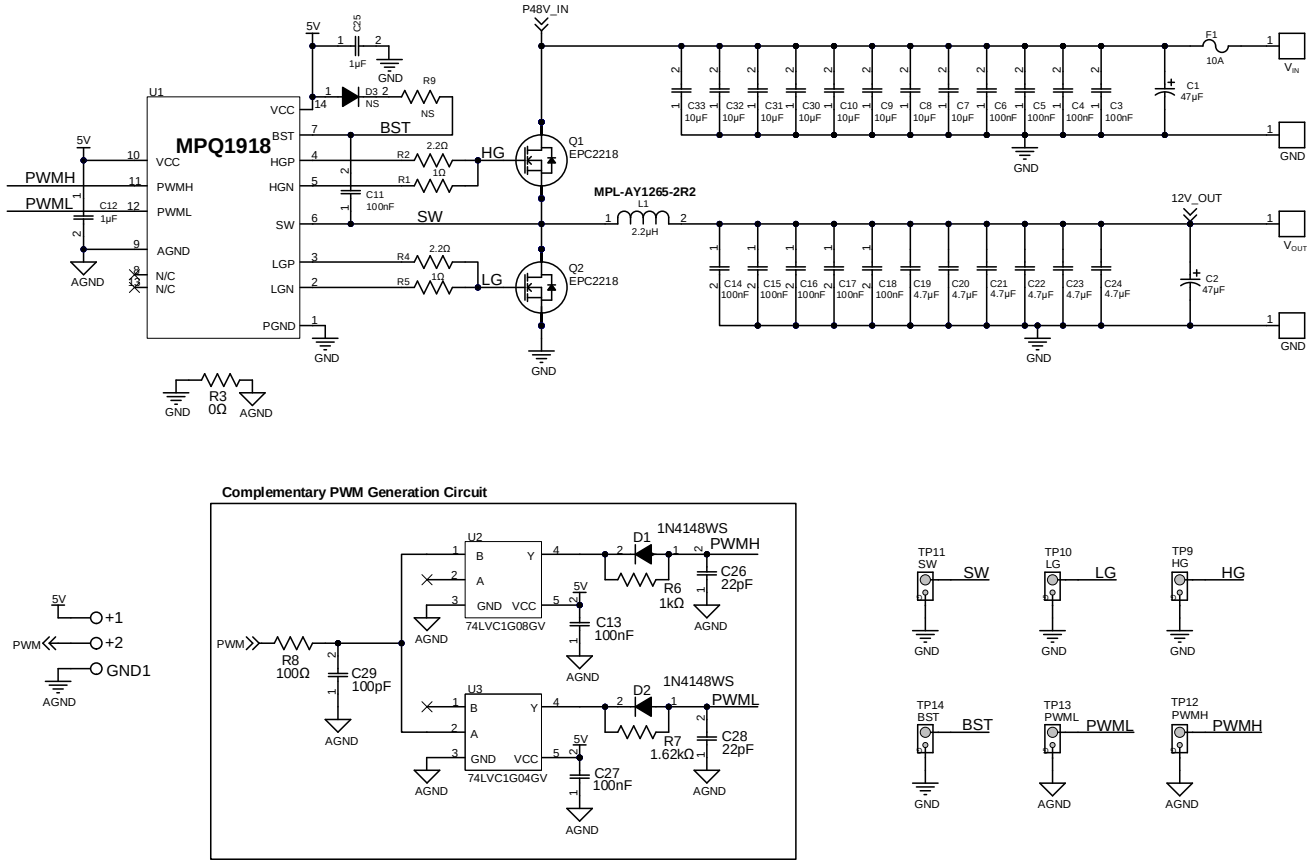

Figure 2: Typical Application Circuit (Reference Design)

MPS Proprietary Information. Patent Protected. Unauthorized Photocopy and Duplication Prohibited.
© 2023 MPS. All Rights Reserved.

PACKAGE INFORMATION

QFN-14 (3mmx3mm)

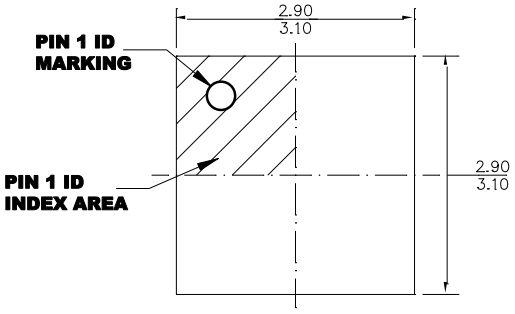

TOP VIEW

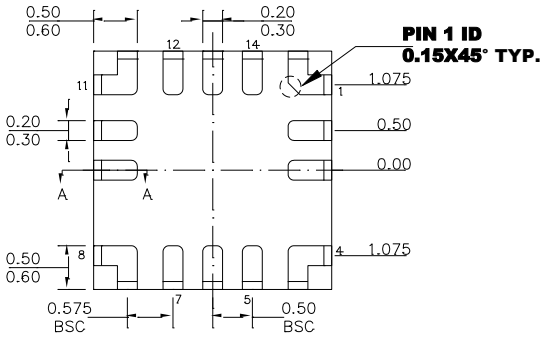

BOTTOM VIEW

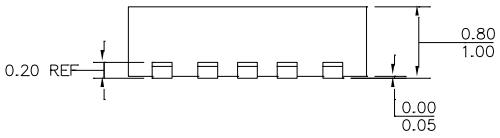

SIDE VIEW

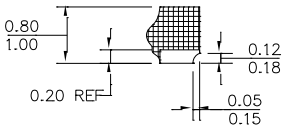

SECTION A-A

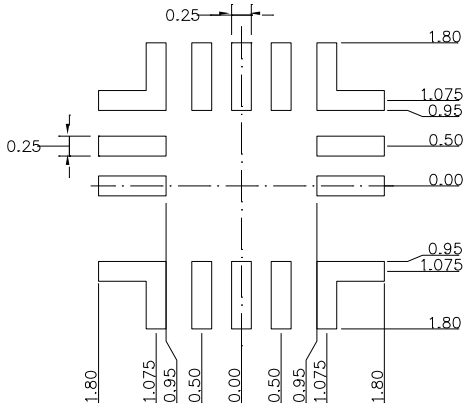

RECOMMENDED LAND PATTERN

NOTE:

1) THE LEAD SIDE IS WETTABLE.
2) ALL DIMENSIONS ARE IN MILLIMETERS.
3) LEAD COPLANARITY SHALL BE 0.08 MILLIMETERS MAX.
4) JEDEC REFERENCE IS MO-220.
5) DRAWING IS NOT TO SCALE.

MPS Proprietary Information. Patent Protected. Unauthorized Photocopy and Duplication Prohibited.
© 2023 MPS. All Rights Reserved.

CARRIER INFORMATION

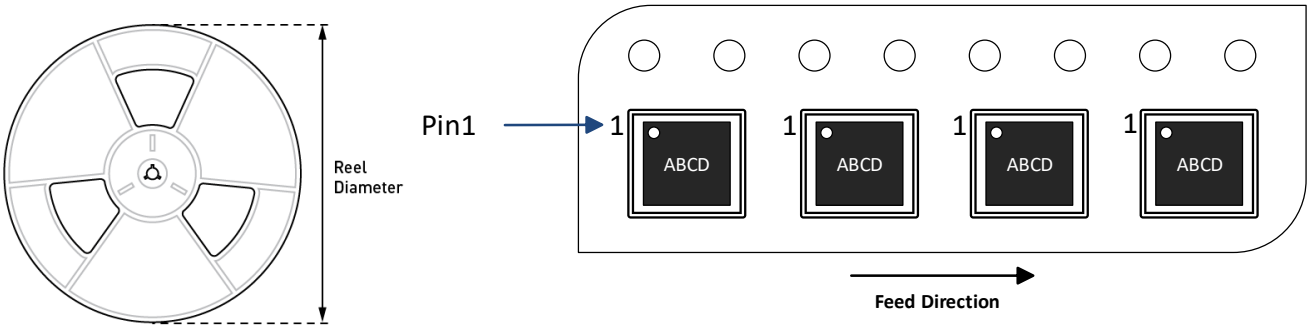

Part Number	Package Description	Quantity/ Reel	Quantity/ Tube	Quantity/ Tray	Reel Diameter	Carrier Tape Width	Carrier Tape Pitch
MPQ1918GQE-AEC1	QFN-14 (3mmx3mm)	5000	N/A	N/A	13in	12mm	8mm

MPS Proprietary Information. Patent Protected. Unauthorized Photocopy and Duplication Prohibited.
© 2023 MPS. All Rights Reserved.

REVISION HISTORY

Revision #	Revision Date	Description	Pages Updated
1.0	4/13/2023	Initial Release	-

Notice: The information in this document is subject to change without notice. Please contact MPS for current specifications. Users should warrant and guarantee that third-party Intellectual Property rights are not infringed upon when integrating MPS products into any application. MPS will not assume any legal responsibility for any said applications.

MPS Proprietary Information. Patent Protected. Unauthorized Photocopy and Duplication Prohibited.
© 2023 MPS. All Rights Reserved.