# GL-2030E

Aliases (UNFGL2030EXXXX)

Obsolete

KEMET, GL, EMI/RFI Filters, Noise Suppression, 250 VAC

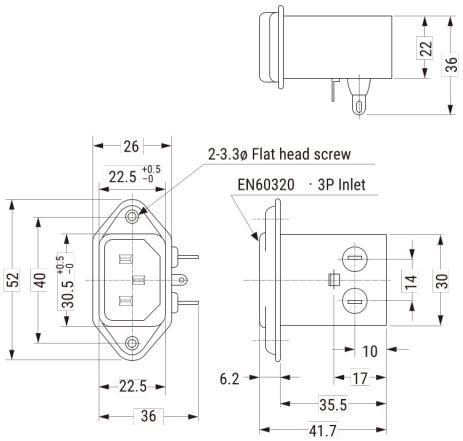


Click here for the 3D model.

| Dimensions | |
|---|---|
| L | 41.7mm NOM |
| W | 52mm NOM |
| H | 26mm NOM |

| Packaging Specifications | |
|---|---|
| Packaging | Tray, Box |
| Packaging Quantity | 40 |
| Typical Component Weight | 40 g |

| General Information | |
|---|---|
| Series | GL |
| Style | Metal Box |
| Description | Noise Filters |
| RoHS | Yes |
| Qualifications | UL, CSA, TUV |
| Notes | Last time buy due: May 31, 2024. |
| Miscellaneous | 30 K Self-Temperature Rise Max. |

| Specifications | |
|---|---|
| Voltage AC | 250 VAC |
| Voltage | 1500 VAC Withstanding Voltage 1 Min. Line to Ground |
| Rated Current | 3 A (AC/DC) |
| Rated Temperature | 55°C |
| Temperature Range | -25/+55°C |
| Leakage Current | 0.5 mA MAX (250 V 60 Hz) |
| ESR | 300 MOhms MIN Insulation 500 VDC 1 Min. Line To Ground |

Statements of suitability for certain applications are based on our knowledge of typical operating conditions for such applications, but are not intended to constitute - and we specifically disclaim - any warranty concerning suitability for a specific customer application or use. This Information is intended for use only by customers who have the requisite experience and capability to determine the correct products for their application. Any technical advice inferred from this Information or otherwise provided by us with reference to the use of our products is given gratis, and we assume no obligation or liability for the advice given or results obtained.



© 2006 - 2024 KEMET