Ambient Light Sensor

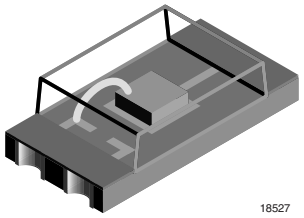

FEATURES

- Package type: surface mount
- Package form: 1206
- Dimensions (L x W x H in mm): 4 x 2 x 1.05
- AEC-Q101 qualified
- High photo sensitivity
- Adapted to human eye responsivity
- Angle of half sensitivity: φ = ± 60°
- Floor life: 168 h, MSL 3, acc. J-STD-020
- Lead (Pb)-free reflow soldering
- Compliant to RoHS Directive 2002/95/EC and in accordance to WEEE 2002/96/EC

AUTOMOTIVE GRADE

Pb-free

e4

RoHS COMPLIANT

GREEN (5-2008)**

Note

** Please see document “Vishay Material Category Policy”: www.vishay.com/doc?99902

DESCRIPTION

TEMT6000X01 ambient light sensor is a silicon NPN epitaxial planar phototransistor in a miniature transparent 1206 package for surface mounting. It is sensitive to visible light much like the human eye and has peak sensitivity at 570 nm.

APPLICATIONS

Ambient light sensor for control of display backlight dimming in LCD displays and keypad backlighting of mobile devices and in industrial on/off-lighting operation.

- Automotive sensors
- Mobile phones
- Notebook computers
- PDA’s
- Cameras
- Dashboards

PRODUCT SUMMARY			
COMPONENT	I_{PCE} (µA)	φ (deg)	$\lambda_{0.5}$ (nm)
TEMT6000X01	50	± 60	440 to 800

Note

- Test condition see table “Basic Characteristics”

ORDERING INFORMATION			
ORDERING CODE	PACKAGING	REMARKS	PACKAGE FORM
TEMT6000X01	Tape and reel	MOQ: 3000 pcs, 3000 pcs/reel	1206

Note

- MOQ: minimum order quantity

ABSOLUTE MAXIMUM RATINGS (T_{amb} = 25 °C, unless otherwise specified)				
PARAMETER	TEST CONDITION	SYMBOL	VALUE	UNIT
Collector emitter voltage		V_{CEO}	6	V
Emitter collector voltage		V_{ECO}	1.5	V
Collector current		I_C	20	mA
Power dissipation		P_V	100	mW

For technical questions, contact: detectortechsupport@vishay.com

THIS DOCUMENT IS SUBJECT TO CHANGE WITHOUT NOTICE. THE PRODUCTS DESCRIBED HEREIN AND THIS DOCUMENT ARE SUBJECT TO SPECIFIC DISCLAIMERS, SET FORTH AT www.vishay.com/doc?91000

ABSOLUTE MAXIMUM RATINGS (T_{amb} = 25 °C, unless otherwise specified)				
PARAMETER	**TEST CONDITION**	**SYMBOL**	**VALUE**	**UNIT**
Junction temperature		T_j	100	°C
Operating temperature range		T_{amb}	- 40 to + 100	°C
Storage temperature range		T_{stg}	- 40 to + 100	°C
Soldering temperature	Acc. reflow solder profile fig. 8	T_{sd}	260	°C
Thermal resistance junction/ambient	Soldered on PCB with pad dimensions: 4 mm x 4 mm	R_{thJA}	450	K/W

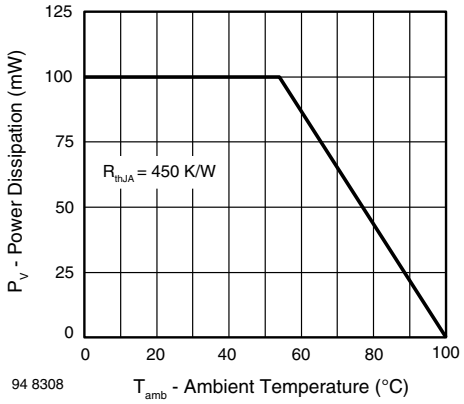

Fig. 1 - Power Dissipation Limit vs. Ambient Temperature

BASIC CHARACTERISTICS (T_{amb} = 25 °C, unless otherwise specified)						
PARAMETER	**TEST CONDITION**	**SYMBOL**	**MIN.**	**TYP.**	**MAX.**	**UNIT**
Collector emitter breakdown voltage	I_C = 0.1 mA	V_{CEO}	6			V
Collector dark current	V_{CE} = 5 V, E = 0	I_{CEO}		3	50	nA
Collector emitter capacitance	V_{CE} = 0 V, f = 1 MHz, E = 0	C_{CEO}		16		pF
Collector light current	E_V = 20 lx, CIE illuminant A, V_{CE} = 5 V	I_{PCE}	3.5	10	16	µA
	E_V = 100 lx, CIE illuminant A, V_{CE} = 5 V	I_{PCE}		50		µA
Temperature coefficient of I_{PCE}	CIE illuminant A	TK_{IPCE}		1.18		%/K
	LED, white	TK_{IPCE}		0.9		%/K
Angle of half sensitivity		φ		± 60		deg
Wavelength of peak sensitivity		λ_p		570		nm
Range of spectral bandwidth		$\lambda_{0.5}$		440 to 800		nm
Collector emitter saturation voltage	E_V = 20 lx, CIE illuminant A, I_{PCE} = 1.2 µA	V_{CEsat}		0.1		V

For technical questions, contact: detectortechsupport@vishay.com
THIS DOCUMENT IS SUBJECT TO CHANGE WITHOUT NOTICE. THE PRODUCTS DESCRIBED HEREIN AND THIS DOCUMENT ARE SUBJECT TO SPECIFIC DISCLAIMERS, SET FORTH AT www.vishay.com/doc?91000

BASIC CHARACTERISTICS (T_{amb} = 25 °C, unless otherwise specified)

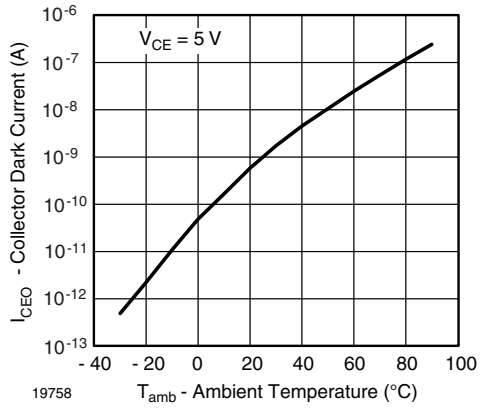

Fig. 1 - Collector Dark Current vs. Ambient Temperature

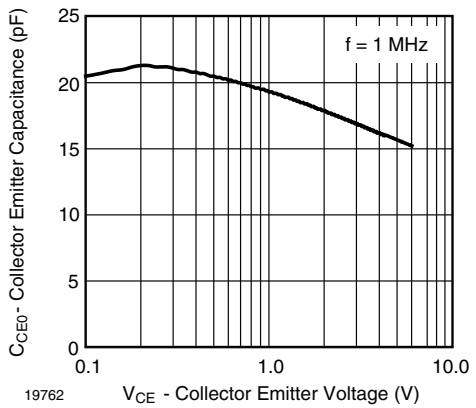

Fig. 4 - Collector Emitter Capacitance vs. Collector Emitter Voltage

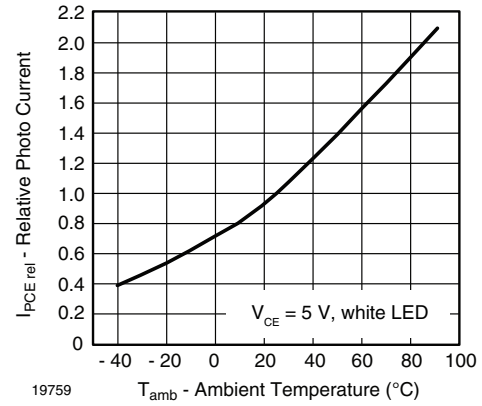

Fig. 2 - Relative Photo Current vs. Ambient Temperature

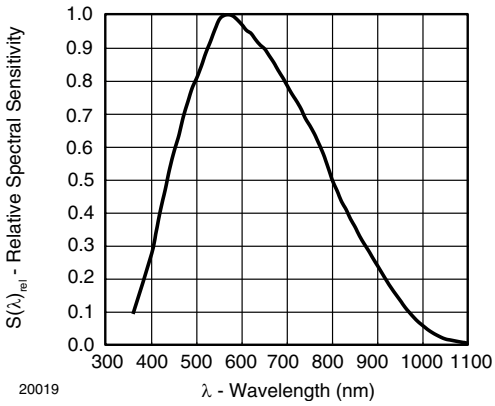

Fig. 5 - Relative Spectral Sensitivity vs. Wavelength

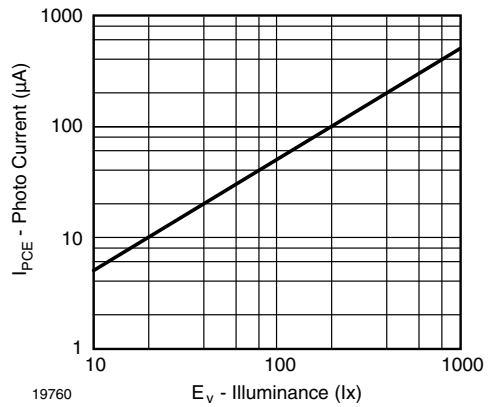

Fig. 3 - Photo Current vs. Illuminance

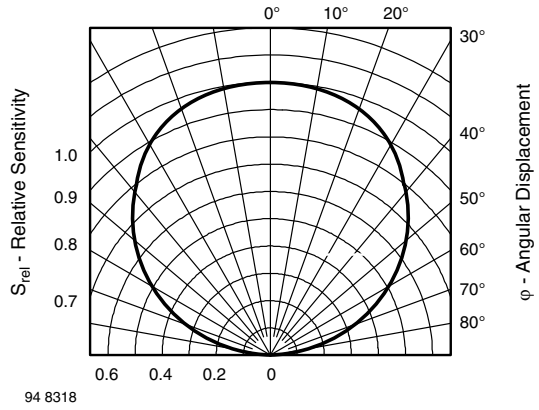

Fig. 6 - Relative Radiant Sensitivity vs. Angular Displacement

For technical questions, contact: detectortechsupport@vishay.com
THIS DOCUMENT IS SUBJECT TO CHANGE WITHOUT NOTICE. THE PRODUCTS DESCRIBED HEREIN AND THIS DOCUMENT ARE SUBJECT TO SPECIFIC DISCLAIMERS, SET FORTH AT www.vishay.com/doc?91000

REFLOW SOLDER PROFILE

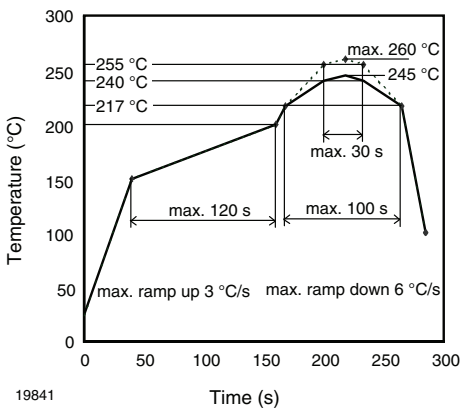

Fig. 7 - Lead (Pb)-free Reflow Solder Profile acc. J-STD-020D

DRYPACK

Devices are packed in moisture barrier bags (MBB) to prevent the products from moisture absorption during transportation and storage. Each bag contains a desiccant.

FLOOR LIFE

Time between soldering and removing from MBB must not exceed the time indicated in J-STD-020:
Moisture sensitivity: level 3
Floor life: 168 h
Conditions: T_{amb} < 30 °C, RH < 60 %

DRYING

In case of moisture absorption devices should be baked before soldering. Conditions see J-STD-020 or label. Devices taped on reel dry using recommended conditions:
192 h at 40 °C (+ 5 °C), RH < 5 %
or
96 h at 60 °C (+ 5 °C), RH < 5 %.

PACKAGE DIMENSIONS in millimeters

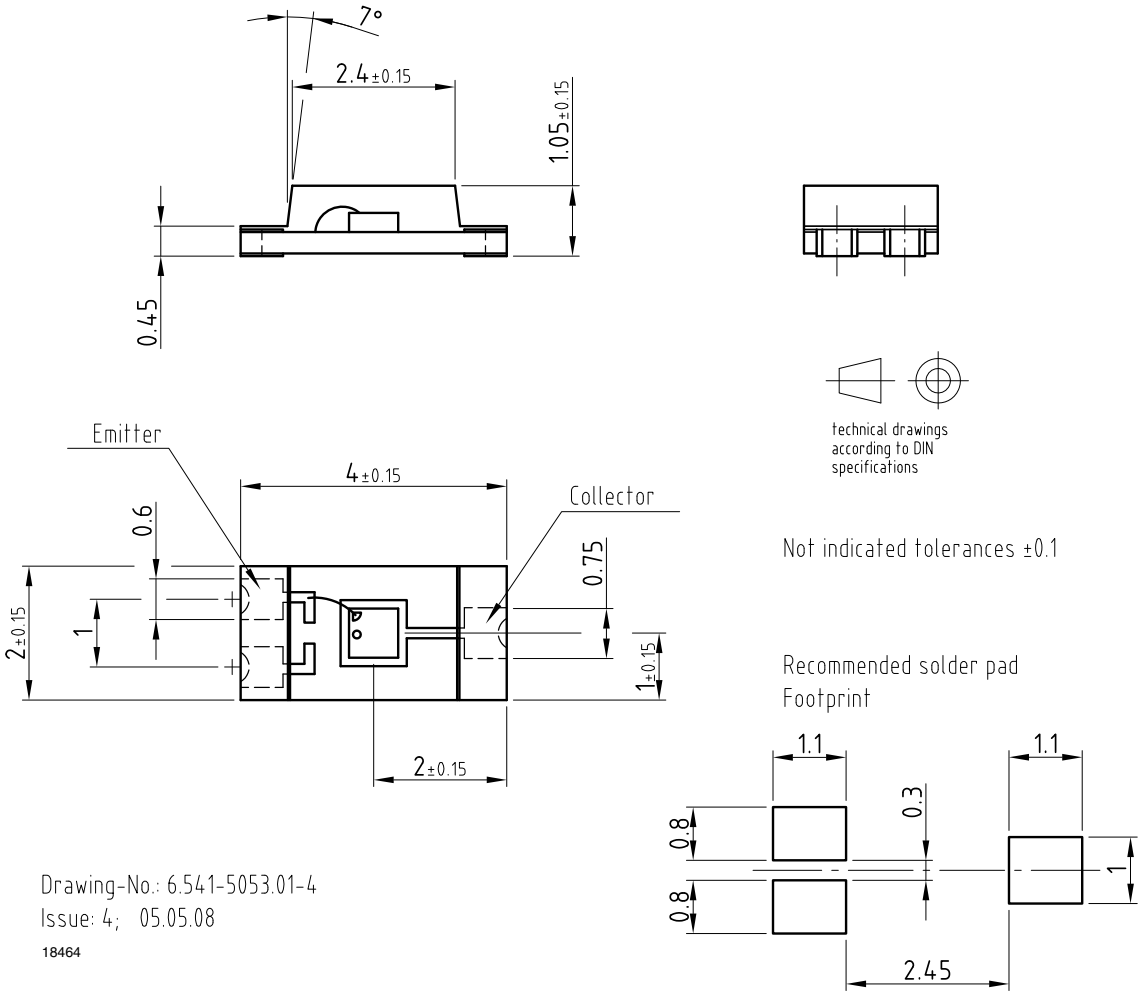

For technical questions, contact: detectortechsupport@vishay.com
THIS DOCUMENT IS SUBJECT TO CHANGE WITHOUT NOTICE. THE PRODUCTS DESCRIBED HEREIN AND THIS DOCUMENT ARE SUBJECT TO SPECIFIC DISCLAIMERS, SET FORTH AT www.vishay.com/doc?91000

BLISTER TAPE DIMENSIONS in millimeters

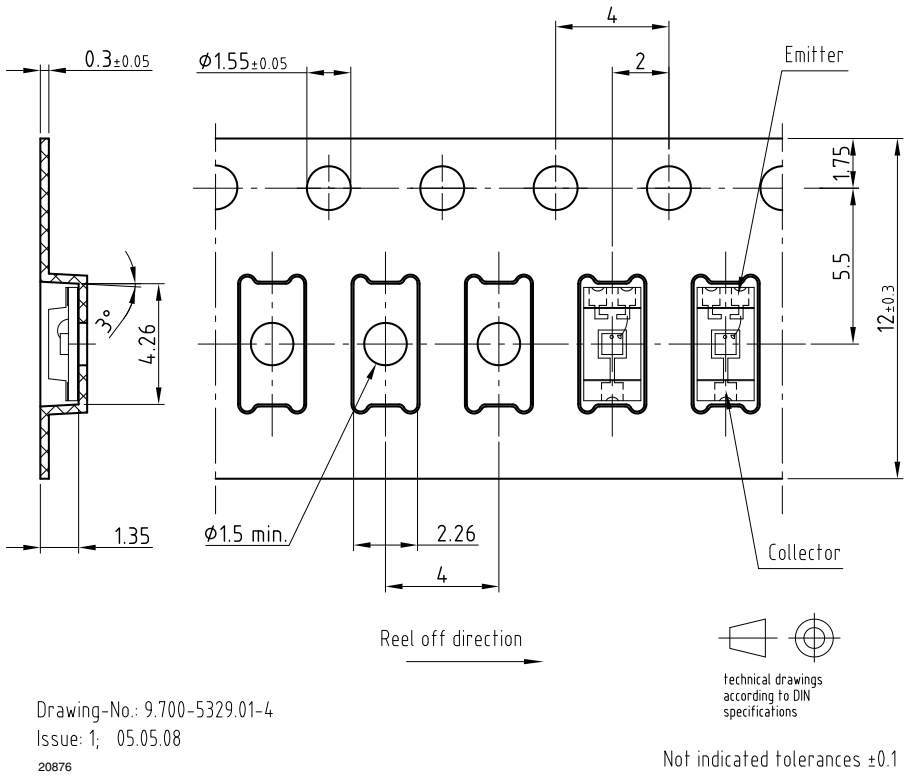

Drawing-No.: 9.700-5329.01-4
Issue: 1; 05.05.08
20876

Not indicated tolerances ±0.1

REEL DIMENSIONS in millimeters

Volume: 3000 pcs/reel

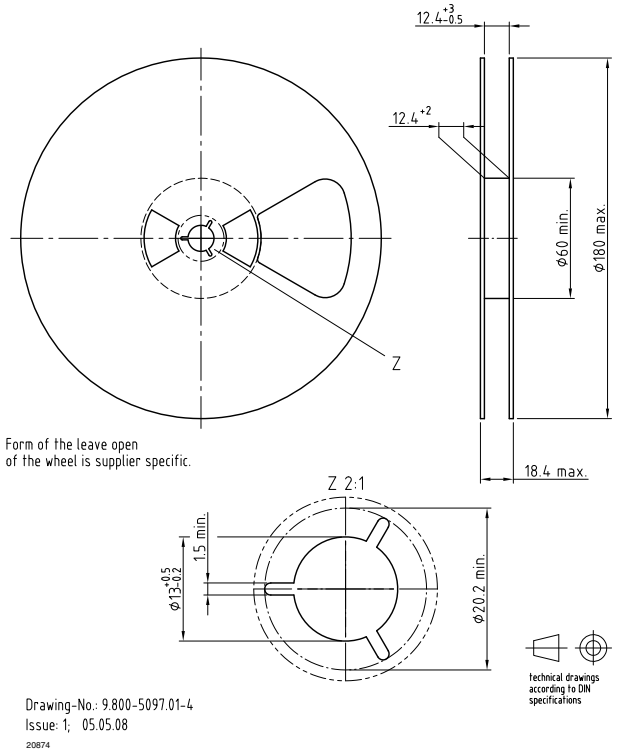

Drawing-No.: 9.800-5097.01-4
Issue: 1; 05.05.08
20874

For technical questions, contact: detectortechsupport@vishay.com
THIS DOCUMENT IS SUBJECT TO CHANGE WITHOUT NOTICE. THE PRODUCTS DESCRIBED HEREIN AND THIS DOCUMENT ARE SUBJECT TO SPECIFIC DISCLAIMERS, SET FORTH AT www.vishay.com/doc?91000

Disclaimer

ALL PRODUCT, PRODUCT SPECIFICATIONS AND DATA ARE SUBJECT TO CHANGE WITHOUT NOTICE TO IMPROVE RELIABILITY, FUNCTION OR DESIGN OR OTHERWISE.

Vishay Intertechnology, Inc., its affiliates, agents, and employees, and all persons acting on its or their behalf (collectively, “Vishay”), disclaim any and all liability for any errors, inaccuracies or incompleteness contained in any datasheet or in any other disclosure relating to any product.

Vishay makes no warranty, representation or guarantee regarding the suitability of the products for any particular purpose or the continuing production of any product. To the maximum extent permitted by applicable law, Vishay disclaims (i) any and all liability arising out of the application or use of any product, (ii) any and all liability, including without limitation special, consequential or incidental damages, and (iii) any and all implied warranties, including warranties of fitness for particular purpose, non-infringement and merchantability.

Statements regarding the suitability of products for certain types of applications are based on Vishay's knowledge of typical requirements that are often placed on Vishay products in generic applications. Such statements are not binding statements about the suitability of products for a particular application. It is the customer's responsibility to validate that a particular product with the properties described in the product specification is suitable for use in a particular application. Parameters provided in datasheets and / or specifications may vary in different applications and performance may vary over time. All operating parameters, including typical parameters, must be validated for each customer application by the customer's technical experts. Product specifications do not expand or otherwise modify Vishay's terms and conditions of purchase, including but not limited to the warranty expressed therein.

Hyperlinks included in this datasheet may direct users to third-party websites. These links are provided as a convenience and for informational purposes only. Inclusion of these hyperlinks does not constitute an endorsement or an approval by Vishay of any of the products, services or opinions of the corporation, organization or individual associated with the third-party website. Vishay disclaims any and all liability and bears no responsibility for the accuracy, legality or content of the third-party website or for that of subsequent links.

Vishay products are not designed for use in life-saving or life-sustaining applications or any application in which the failure of the Vishay product could result in personal injury or death unless specifically qualified in writing by Vishay. Customers using or selling Vishay products not expressly indicated for use in such applications do so at their own risk. Please contact authorized Vishay personnel to obtain written terms and conditions regarding products designed for such applications.

No license, express or implied, by estoppel or otherwise, to any intellectual property rights is granted by this document or by any conduct of Vishay. Product names and markings noted herein may be trademarks of their respective owners.

© 2025 VISHAY INTERTECHNOLOGY, INC. ALL RIGHTS RESERVED

THIS DOCUMENT IS SUBJECT TO CHANGE WITHOUT NOTICE. THE PRODUCTS DESCRIBED HEREIN AND THIS DOCUMENT ARE SUBJECT TO SPECIFIC DISCLAIMERS, SET FORTH AT www.vishay.com/doc?91000