172434-2 ✔ ACTIVE

Positive Lock | Positive Lock 250

TE Internal #: 172434-2

Receptacle Terminal Housing, 2 Position, 6 mm [.236 in] Centerline, Straight, Black, UL 94V-0, Nylon, Cable Mount (Free-Hanging), Positive Lock 250

View on TE.com >

Terminals & Splices > Terminal Housings, Insulation Sleeves & Blocks > Crimp Terminal Housings







Terminal Type: **Receptacle**

Connector & Housing Type: **Receptacle**

Number of Positions: **2**

Terminal Orientation: **Straight**

UL Flammability Rating: **UL 94V-0**

Features

Product Type Features

Sealable	No
Connector & Housing Type	Receptacle

Configuration Features

Number of Positions	2

Body Features

Primary Product Color	Black

Contact Features

Terminal Type	Receptacle
Terminal Orientation	Straight
Contact Mating Retention	With

Mechanical Attachment

Mating Alignment Type	Polarization
Mating Retention Type	Latch

Mating Alignment	With
Connector Mounting Type	Cable Mount (Free-Hanging)

Housing Features

Housing Material	Nylon
Centerline (Pitch)	6 mm[.236 in]

Usage Conditions

Operating Temperature Range	-40 – 105 °C[-40 – 221 °F]

Industry Standards

UL Flammability Rating	UL 94V-0

Packaging Features

Packaging Quantity	100

Product Compliance

For compliance documentation, visit the product page on TE.com>

EU RoHS Directive 2011/65/EU	Compliant
EU ELV Directive 2000/53/EC	Compliant
China RoHS 2 Directive MIIT Order No 32, 2016	No Restricted Materials Above Threshold
EU REACH Regulation (EC) No. 1907/2006	Current ECHA Candidate List: JUNE 2025 (250) Candidate List Declared Against: JUNE 2025 (250) Does not contain REACH SVHC
Halogen Content	Low Halogen - Br, Cl, F < 900 ppm per homogenous material. Also BFR/CFR/PVC Free
Solder Process Capability	Not applicable for solder process capability

Product Compliance Disclaimer

This information is provided based on reasonable inquiry of our suppliers and represents our current actual knowledge based on the information they provided. This information is subject to change. The part numbers that TE has identified as EU RoHS compliant have a maximum concentration of 0.1% by weight in homogenous materials for lead, hexavalent chromium, mercury, PBB, PBDE, DBP, BBP, DEHP, DIBP, and 0.01% for cadmium, or qualify for an exemption to these limits as defined in the Annexes of Directive 2011/65/EU (RoHS2). Finished electrical and electronic equipment products will be CE marked as required by Directive 2011/65/EU. Components may not be CE marked. Additionally, the part numbers that TE has identified as EU ELV compliant have a maximum concentration of 0.1% by weight in homogenous materials for lead, hexavalent chromium, and mercury, and 0.01% for cadmium, or qualify for an exemption to these limits as defined in the Annexes of Directive 2000/53/EC (ELV). Regarding the REACH Regulation, the information TE provides on SVHC in articles for this part number is based on the latest European Chemicals Agency (ECHA) ‘Guidance on requirements for substances in articles’ posted at this URL: https://echa.europa.eu/guidance-documents/guidance-on-reach

Compatible Parts



TE Part # 1-1743165-2
250 HSG. PL EX REC. 12mm 2P BLACK



TE Part # 170452-2
PL 250 AUTOMOTIVE REC 22-20 AWG PRE TPBR



TE Part # 172434-6
250 P.LOCK 2P HSG T-TYPE BLUE



TE Part # 170456-2
PL 250 AM REC 12-10 0.40 X 21 PRE-TPBR



TE Part # 170454-2
PL 250 AM REC 18-14 0.40 X 21 PRE-TPBR

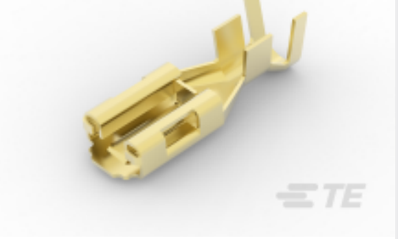

TE Part # 170456-1
PL 250 AUTOMOTIVE REC 12-10 0.40 X 21 BR



TE Part # 170454-1
PL 250 AUTOMOTIVE REC 18-14 0.40 X 21 BR



TE Part # 1-1743206-2
250 FLAG P-LOCK HSG 2P 12.0 BLK GWT



TE Part # 170452-1
PL 250 AM REC 22-20 AWG 0.406 X 21 BR

Also in the Series | Positive Lock 250

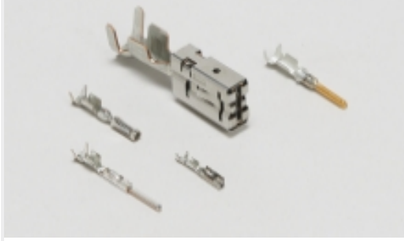

Automotive Terminals(1)



Crimp Terminal Housings(176)



Insertion & Extraction Tools(3)



Insulation Boots & Sleeves(5)



Quick Disconnects(171)

Customers Also Bought

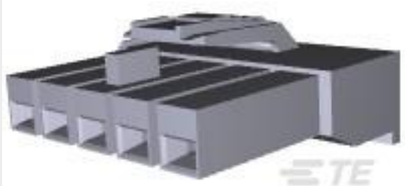

TE Part #178482-1
UP 3.96 5P PLUG HSG NATRL



TE Part #CAT-T319-CH8172
TH/.025 CONNECTOR SYSTEM, HOUSING

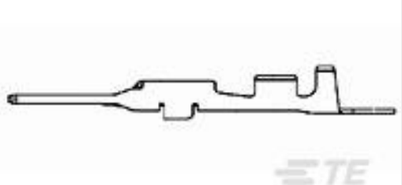

TE Part #1565963-1
040III TAB NON SEALED TIN



TE Part #4-1924067-1
2POS, MCON 1.2 CB REC 2p TL SEALED



TE Part #2174106-1
PLUG HOUSING ASSEMBLY 50POS 0.5 /1.0



TE Part #2404519-3
SWS,HVA630,4POS CABLE SEAL



TE Part #2411705-3
SPACER,4POS,AMP MCP 6.3/4.8K

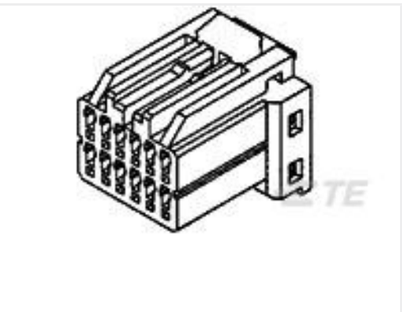

TE Part #175965-3
040 MLC 12POS PLUG HSG ASSY

Documents

Product Drawings

POSITIVE LOCK 250 (6.3 MM) HOUSING

English

CAD Files

3D PDF

3D

Customer View Model

ENG_CVM_CVM_172434-2_D.2d_dxf.zip

English

Customer View Model

ENG_CVM_CVM_172434-2_D.3d_igs.zip

English

Customer View Model

ENG_CVM_CVM_172434-2_D.3d_stp.zip

English

By downloading the CAD file I accept and agree to the Terms and Conditions of use.

Product Specifications

Crimping of 250 Series Tab and Receptacle Contacts

Japanese

Application Specification

Japanese

Crimping of 250 Series, Automotive Positive Lock Receptacle Contact

English

Application Specification

English

Agency Approvals

UL Report

English