156667-1 ✔ ACTIVE

PIDG

TE Internal #: 156667-1

Quick Disconnect Receptacle, Partially Insulated, 22 – 18 AWG, .26 – .96 mm² Wire, 509 – 1900 CMA, 6.35 mm [.25 in] Tab Width, Compression Crimp, PIDG

View on TE.com >

Terminals & Splices > Quick Disconnects > PIDG FASTON Receptacle Quick Disconnects

Quick Disconnect Terminal Type: **Receptacle**

Wire Size: **509 – 1900 CMA**

Mating Tab Width: **6.35 mm [.25 in]**

All PIDG FASTON Receptacle Quick Disconnects (21)

Features

Product Type Features

Compatible With Discrete Wire Type	Stranded
Insertion Force	Normal

Configuration Features

Compatible With Wire & Cable Type	Discrete Wire
Connection Capacity	Single

Electrical Characteristics

Voltage Rating	300 V

Body Features

Insulation Material	Nylon

Contact Features

Quick Disconnect Terminal Type	Receptacle
Mating Tab Width	6.35 mm[.25 in]
Mating Tab Thickness	.81 mm[.032 in]

Terminal Orientation	Flag
Contact Base Material	Brass
Terminal Plating Material	Tin
Crimp Type	Compression Crimp
Barrel Type	Closed

Termination Features

Product Terminates To	Wire & Cable

Mechanical Attachment

Wire Insulation Support	With
Mating Retention Type	Dimple

Dimensions

Product Length	19.3 mm[.76 in]
Compatible Insulation Diameter Range	2.67 – 3.56 mm[.105 – .14 in]
Terminal Material Thickness	.41 mm[.016 in]
Wire Size	509 – 1900 CMA

Usage Conditions

Insulation Option	Partially Insulated

Industry Standards

UL Flammability Rating	UL 94V-2

Packaging Features

Packaging Quantity	1000
Packaging Method	Carton

Other

Barrel Color	Red

Product Compliance

For compliance documentation, visit the product page on TE.com>

EU RoHS Directive 2011/65/EU	Compliant
EU ELV Directive 2000/53/EC	Compliant
China RoHS 2 Directive MIIT Order No 32, 2016	No Restricted Materials Above Threshold
EU REACH Regulation (EC) No. 1907/2006	Current ECHA Candidate List: JUNE 2025 (250)

	Candidate List Declared Against: JUNE 2025 (250) Does not contain REACH SVHC
Halogen Content	Low Halogen - Br, Cl, F < 900 ppm per homogenous material. Also BFR/CFR/PVC Free
Solder Process Capability	Not applicable for solder process capability

Product Compliance Disclaimer

This information is provided based on reasonable inquiry of our suppliers and represents our current actual knowledge based on the information they provided. This information is subject to change. The part numbers that TE has identified as EU RoHS compliant have a maximum concentration of 0.1% by weight in homogenous materials for lead, hexavalent chromium, mercury, PBB, PBDE, DBP, BBP, DEHP, DIBP, and 0.01% for cadmium, or qualify for an exemption to these limits as defined in the Annexes of Directive 2011/65/EU (RoHS2). Finished electrical and electronic equipment products will be CE marked as required by Directive 2011/65/EU. Components may not be CE marked. Additionally, the part numbers that TE has identified as EU ELV compliant have a maximum concentration of 0.1% by weight in homogenous materials for lead, hexavalent chromium, and mercury, and 0.01% for cadmium, or qualify for an exemption to these limits as defined in the Annexes of Directive 2000/53/EC (ELV). Regarding the REACH Regulation, the information TE provides on SVHC in articles for this part number is based on the latest European Chemicals Agency (ECHA) 'Guidance on requirements for substances in articles' posted at this URL: https://echa.europa.eu/guidance-documents/guidance-on-reach

Compatible Parts

TE Part # 2392021-1
RED BATTERY DAHT KIT 110V (47689-4)

TE Part # 539691-2
ERGO DIE R.B.Y

TE Part # 58423-1
DIE, RBY IS9252

TE Part # 47386-4
DAHT PG PIDG 26-16 ASSY

TE Part # 2392021-2
RED BATTERY DAHT KIT 220V (47689-4)

TE Part # 58433-3
PRO CR ASSY, RBY IS9252

TE Part # 59824-1
TETRA-CRIMP PIDG PG FASTON 22-10 ASSY

TE Part # 90035-3
DAHT PIDG FASTON 22-18 ASSY

Also in the Series | PIDG

Compression Connectors(50)

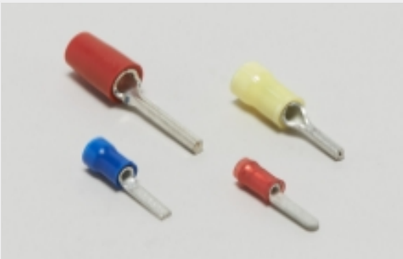

Crimp Wire Pins, Tabs & Ferrules(39)

Hand Crimping Tools(2)

Knife Disconnects(11)

Ring Terminals(589)

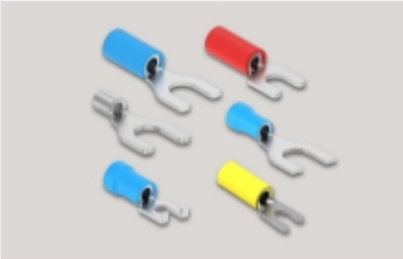

Spade Terminals(228)

Special Purpose Terminals(1)

Splices(41)

Customers Also Bought

TE Part #800364-SF
FN282-1-06

TE Part #T1932060000-009
H6BPR-AGC-EMC-C

TE Part #ZPF000000000099896
901-24 R 48-0 PN

TE Part #ZPF000000000097853
9316, Rear accessory RM, 61

TE Part #ZPF000000000019227
FDBA 56-14-12 PN-K

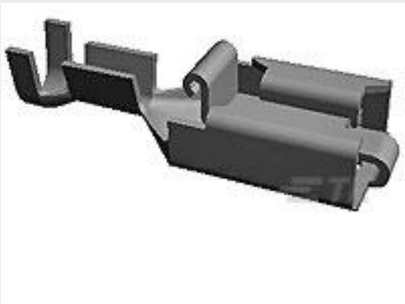

TE Part #928901-4
PL 250 REC TERMINAL 17-13 TPPB LP

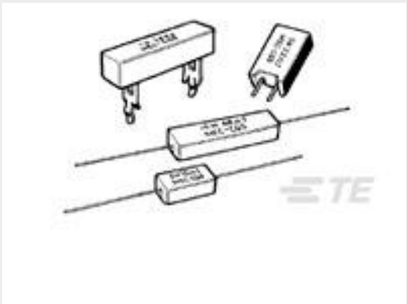

TE Part #2-1623789-2
SQM7 R33 5% (WIRE)

TE Part #7-1625999-4
HSC100 68K 5%

TE Part #1838893-2
M12 Mtl MALE PNL CONN. Sldr Rear (Hex)

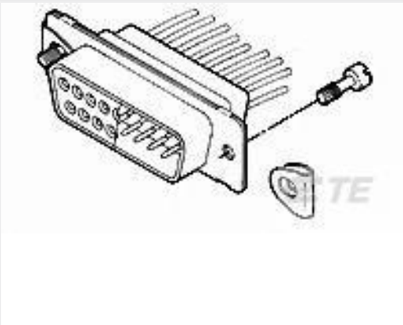

TE Part #1857211-3
4-40 UNC Screw Retainer Kit Am

Documents

Product Drawings

PIDG FASTON FLAG ASSY 22-18

English

CAD Files

3D PDF

English

Customer View Model

ENG_CVM_156667-1_C.2d_dxf.zip

English

Customer View Model

ENG_CVM_156667-1_C.3d_igs.zip

English

Customer View Model

ENG_CVM_156667-1_C.3d_stp.zip

English

3D PDF

3D

Customer View Model

ENG_CVM_CVM_156667-1_E.2d_dxf.zip

English

Customer View Model

ENG_CVM_CVM_156667-1_E.3d_igs.zip

English

Customer View Model

ENG_CVM_CVM_156667-1_E.3d_stp.zip

English

By downloading the CAD file I accept and agree to the Terms and Conditions of use.

Datasheets & Catalog Pages

PIDG_FASTON

English

Ultra-Fast and Ultra Fast Plus

English

PIDG TERMINALS & SPLICES Quick Reference Guide

English