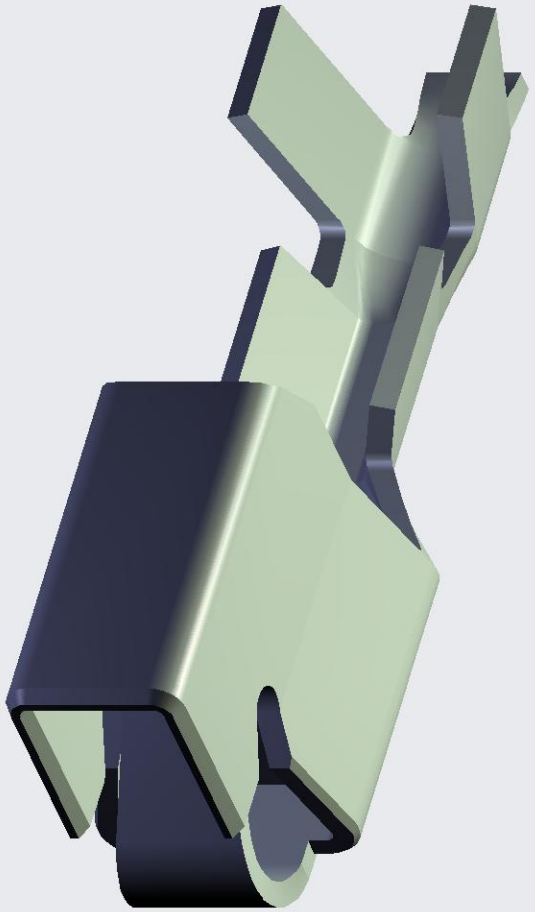

Instance:C-2356981-1.PRT