SMB Jack Commercial Grade Connector Solder Attachment .065 inch End Launch PCB

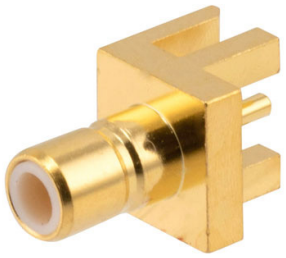

PE51756

Configuration

- SMB Jack Connector
- 50 Ohms
- Straight Body Geometry
- Connector Interface Types: .065 inch End Launch
- Commercial Grade Design

Features

- Max. Operating Frequency 4 GHz
- Gold Plated Brass Contact

Applications

- General Purpose Test
- PCB Applications

Description

Pasternack's PE51756 , SMB, Commercial Grade, connector with solder attachment for .065 inch End Launch PCB is part of our full line of RF components available for same-day shipping. Our SMB jack connector operates up to a maximum frequency of 4 GHz.

Our SMB jack connector PE51756 datasheet specifications and drawing with dimensions are shown below in this PDF. Pasternack's broad catalog of RF, microwave and millimeter wave connectors allows designers to configure and customize their signal connections however they like. Whether the need is to provide an I/O for a board design, or simply create a custom cable assembly configuration, Pasternack has the right connector for the job. Pasternack can also expertly build your custom cable assemblies for you and ship same-day.

Electrical Specifications

Description	Minimum	Typical	Maximum	Units
Frequency Range	DC		4	GHz
Impedance		50		Ohms

Mechanical Specifications

Size

Length	0.46 in [11.68 mm]
Width	0.26 in [6.6 mm]
Height	0.26 in [6.6 mm]
Weight	0.02 lbs [9.07 g]

Material Specifications

Description	Material	Plating
Contact	Brass	Gold
Insulation	PTFE	
Body	Brass	Gold

© 2023 Infinite Electronics, Inc. Pasternack is a registered trademark of Infinite Electronics, Inc.
+1 (866) 558-2786 | sales@pasternack.com | pasternack.com

SMB Jack Commercial Grade Connector Solder Attachment .065 inch End Launch PCB

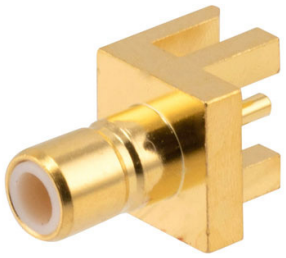

PE51756

Environmental Specifications

Temperature

Compliance Certifications (see product page for current document)

Plotted and Other Data

Notes:

SMB Jack Commercial Grade Connector Solder Attachment .065 inch End Launch PCB from Pasternack Enterprises has same day shipment for domestic and International orders. Our RF, microwave and millimeter wave products maintain a 99.4% availability and are part of the broadest selection in the industry.

Click the following link (or enter part number in "SEARCH" on website) to obtain additional part information including price, inventory and certifications: SMB Jack Commercial Grade Connector Solder Attachment .065 inch End Launch PCB PE51756

URL: https://www.pasternack.com/smb-jack-.065-end-launch-pcb-connector-pe51756-p.aspx

The information contained within this document is accurate to the best of our knowledge and representative of the part described herein. It may be necessary to make modifications to the part and/or the documentation of the part in order to impliment improvements. Pasternack Enterprises reserves the right to make such changes as required. Unless otherwise stated, all specifications are nominal. Pasternack Enterprises does not make any representation or warranty regarding the suitability of the part described herein for any particular purpose, and Pasternack Enterprises does not assume liability arising out of the use of any part or document.

© 2023 Infinite Electronics, Inc. Pasternack is a registered trademark of Infinite Electronics, Inc.

PE51756 CAD Drawing

SMB Jack Commercial Grade Connector Solder Attachment .065 inch End Launch PCB

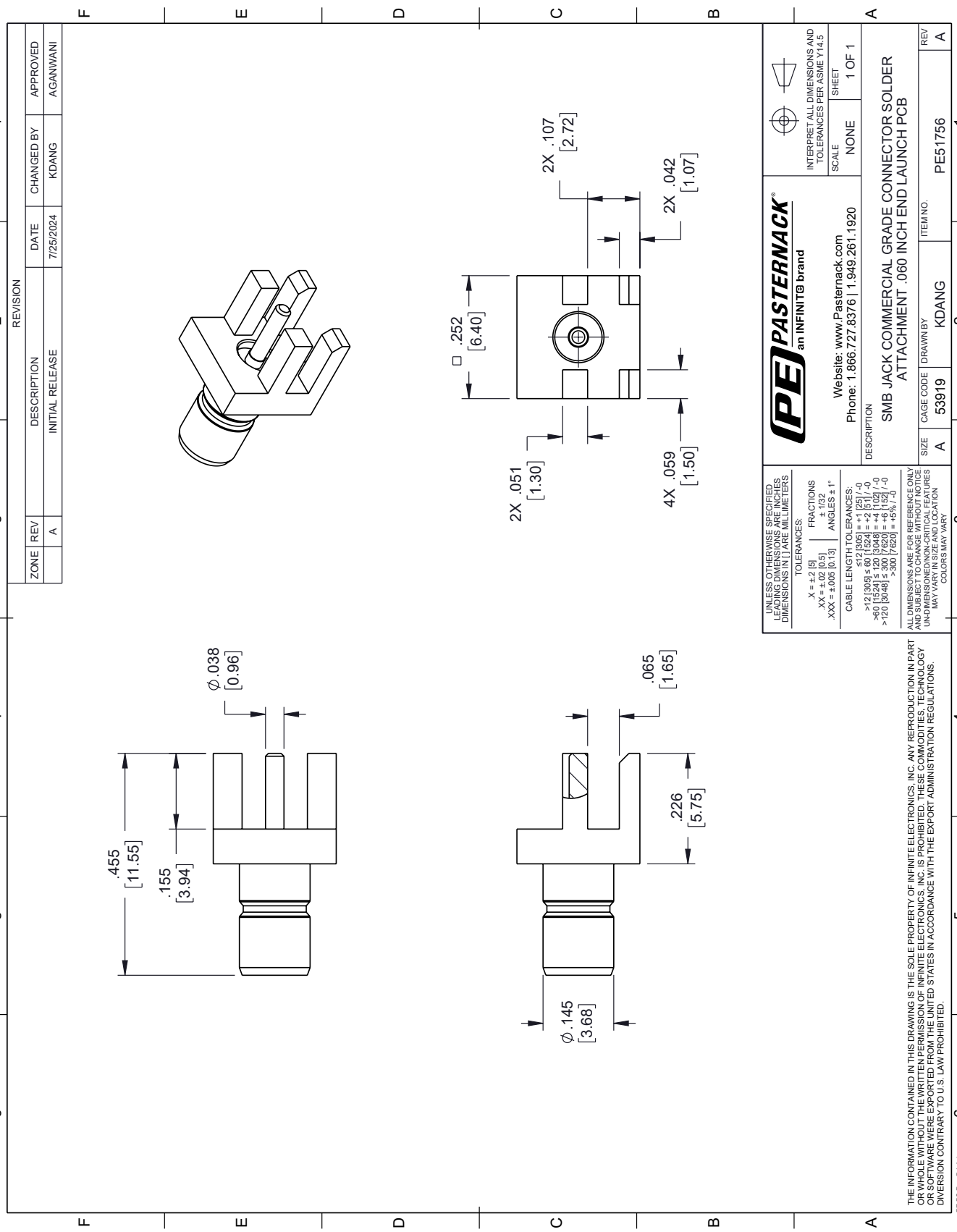

© 2023 Infinite Electronics, Inc. Pasternack is a registered trademark of Infinite Electronics, Inc.