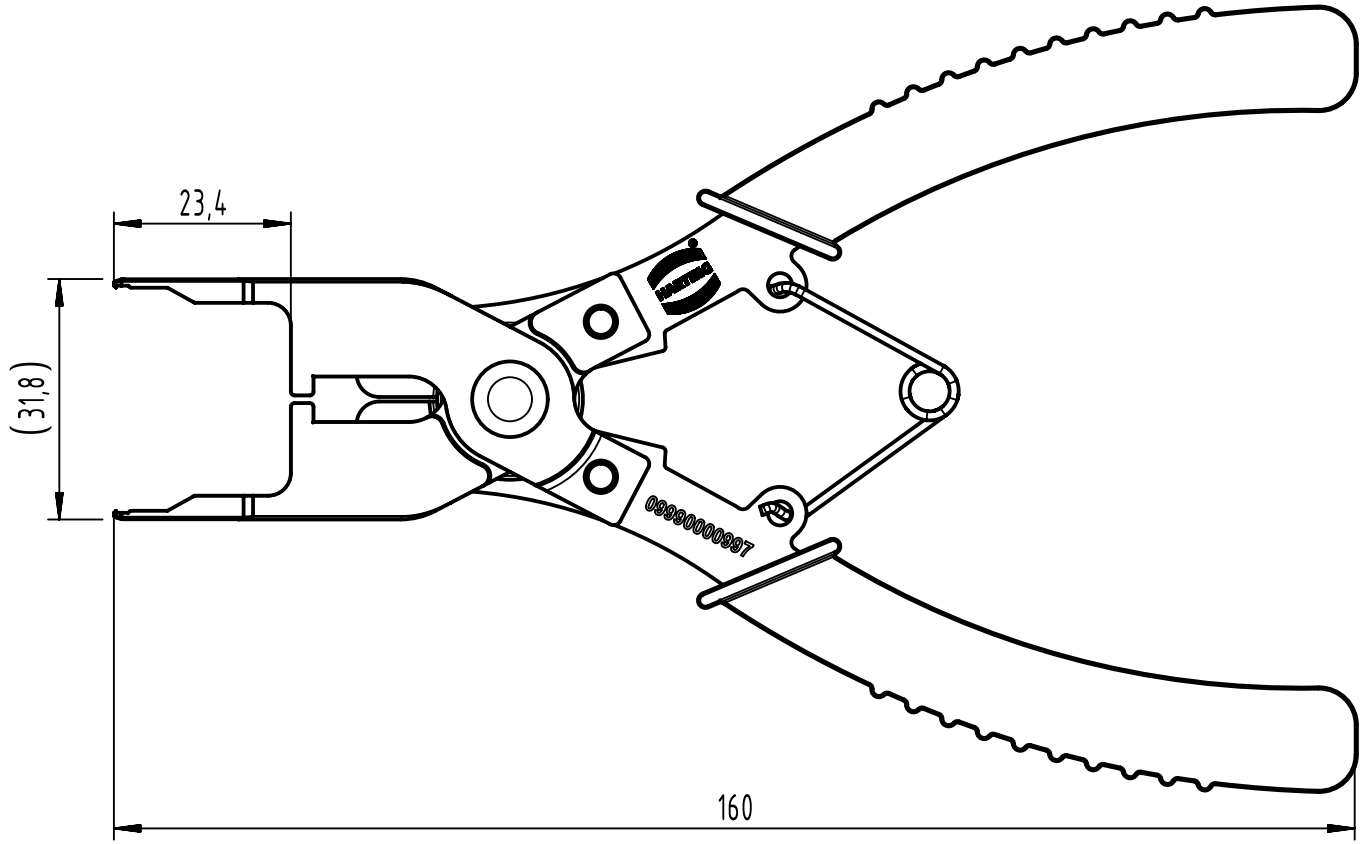

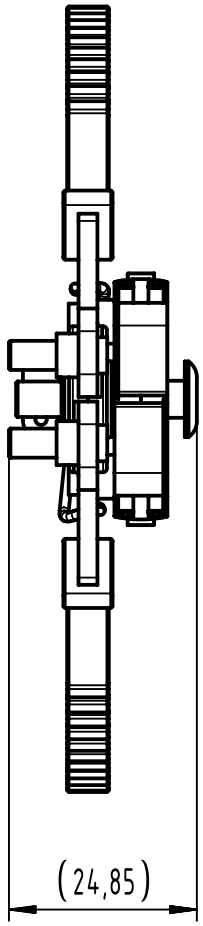

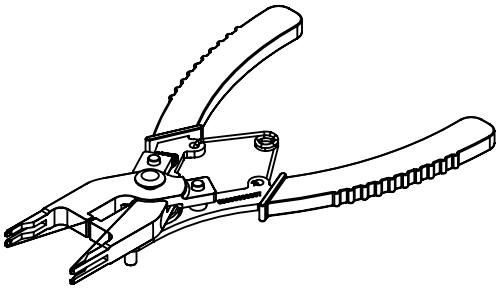

All Dimensions in mm Original Size DIN A4	Scale 1:1	Free size tol.		Ref. Sub.	
All rights reserved	Created by YUA	Inspected by WANGSTE	Standardisation ROEBEN	Date 2022-05-26	State Final Release
Department EL PD	Title Removal Tool Han F+B -Pliers				Doc-Key / ECM-Nr. 100954006/UGD/001/B 500000218380
HARTING D-32339 Espelkamp	Type TB	Number 09 99 000 0997		Rev. B	Page 1/1

A4