MIKROELEKTRONIKA D.O.O, Batajnički drum 23, 11000 Belgrade, Serbia
VAT: SR105917343 Registration No. 20490918
Phone: + 381 11 78 57 600 Fax: + 381 11 63 09 644 E-mail: office@mikroe.com
www.mikroe.com

Expand 11 Click

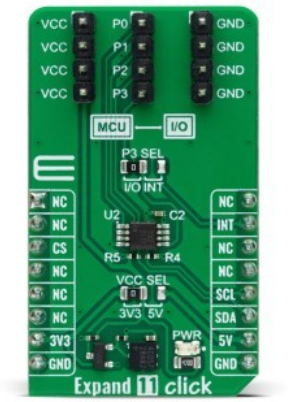



PID: MIKROE-5532

Expand 11 Click is a compact add-on board that contains a multi-port I/O expander. This board features the TCA9536, a general-purpose remote I/O expansion for most microcontroller families from Texas Instruments. The TCA9536 comes in a 4-port configuration and allows easy addition of I/O through a standard I2C serial interface. Each port is user-configurable to either a logic input or logic output by writing to the I/O configuration register bits. The data for each input or output is kept in the corresponding input or output register. There is an additional special function register that port P3, in addition to its standard I/O function, can also configure as an interrupt feature. This Click board™ provides a simple solution when additional I/Os are needed while keeping interconnections to a minimum in system monitoring applications, industrial controllers, portable equipment, and many more.

Expand 11 Click is supported by a mikroSDK compliant library, which includes functions that simplify software development. This Click board™ comes as a fully tested product, ready to be used on a system equipped with the mikroBUS™ socket.

How does it work?

Expand 11 Click is based on the TCA9536, a general-purpose I/O expander from Texas Instruments. It contains four 4-bit configuration ports alongside an I2C-compatible serial interface. Any four I/Os can be configured by the host MCU as an input or output by writing to the configuration register. During the Power-On sequence, the I/Os are configured as inputs with a weak pull-up to the selected mikroBUS™ power rail. The data for each input or output is kept in the corresponding register. The polarity of the Input Port register can be inverted with the Polarity Inversion register. The TCA9536 outputs (latched) have high-current drive capability for directly driving LEDs.

Mikroe produces entire development toolchains for all major microcontroller architectures.
Committed to excellency, we are dedicated to helping engineers bring the project development up to speed and achieve outstanding results.

ISO 27001: 2013 certification of informational security management system.
ISO 14001: 2015 certification of environmental management system.
OHSAS 18001: 2008 certification of occupational health and safety management system.

ISO 9001: 2015 certification of quality management system (QMS).

MIKROELEKTRONIKA D.O.O, Batajnički drum 23, 11000 Belgrade, Serbia
VAT: SR105917343 Registration No. 20490918
Phone: + 381 11 78 57 600 Fax: + 381 11 63 09 644 E-mail: office@mikroe.com
www.mikroe.com

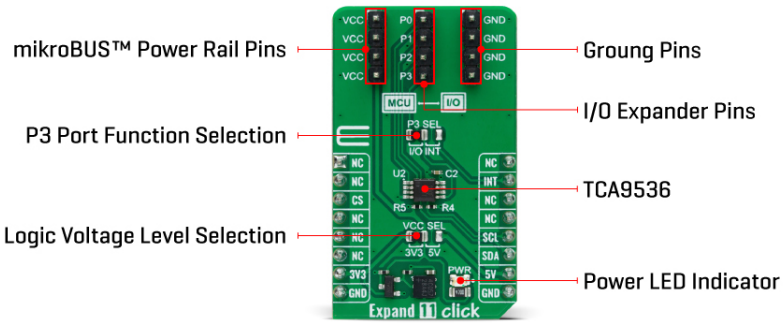

This Click board™ communicates with MCU using the standard I2C 2-Wire interface to read data and configure settings with a maximum frequency of 1MHz. The Expand 11 Click can also select the function of one of the ports, the P3 port, between its standard I/O and interrupt function. The selection is made by positioning SMD jumpers labeled P3 SEL in an appropriate position marked as I/O or INT. In addition to the jumper setting to the proper place, this function must also be set in the special function register to disable the internal pull-up resistors and P3 override to an INT output.

This Click board™ can operate with either 3.3V or 5V logic voltage levels selected via the VCC SEL jumper. This way, it is allowed for both 3.3V and 5V capable MCUs to use the communication lines properly. However, the Click board™ comes equipped with a library containing easy-to-use functions and an example code that can be used, as a reference, for further development.

Specifications

Type	Port expander
Applications	Can be used for system monitoring applications, industrial controllers, portable equipment, and more
On-board modules	TCA9536 - general-purpose I/O expander from Texas Instruments
Key Features	I2C to GPIO expander, wide supply range, 5V tolerant I/O ports, reset feature via serial interface, P3 port configurable as interrupt, polarity inversion, low power consumption, and more
Interface	I2C
ClickID	Yes
Compatibility	mikroBUS™
Click board size	M (42.9 x 25.4 mm)
Input Voltage	3.3V or 5V

Mikroe produces entire development toolchains for all major microcontroller architectures.
Committed to excellency, we are dedicated to helping engineers bring the project development up to speed and achieve outstanding results.

ISO 27001: 2013 certification of informational security management system.
ISO 14001: 2015 certification of environmental management system.
OHSAS 18001: 2008 certification of occupational health and safety management system.

ISO 9001: 2015 certification of quality management system (QMS).

MIKROELEKTRONIKA D.O.O, Batajnički drum 23, 11000 Belgrade, Serbia
VAT: SR105917343 Registration No. 20490918
Phone: + 381 11 78 57 600 Fax: + 381 11 63 09 644 E-mail: office@mikroe.com
www.mikroe.com

Pinout diagram

This table shows how the pinout on Expand 11 Click corresponds to the pinout on the mikroBUS™ socket (the latter shown in the two middle columns).

Notes	Pin	mikroBUS				Pin	Notes
	NC	1	AN	PWM	16	NC	
	NC	2	RST	INT	15	**INT**	Interrupt
	NC	3	CS	RX	14	NC	
	NC	4	SCK	TX	13	NC	
	NC	5	MISO	SCL	12	**SCL**	I2C Clock
	NC	6	MOSI	SDA	11	**SDA**	I2C Data
Power Supply	**3.3V**	7	3.3V	5V	10	**5V**	Power Supply
Ground	**GND**	8	GND	GND	9	**GND**	Ground

Onboard settings and indicators

Label	Name	Default	Description
LD1	PWR	-	Power LED Indicator
JP1	VCC SEL	Left	Logic Level Voltage Selection 3V3/5V: Left position 3V3, Right position 5V
JP2	P3 SEL	Left	P3 Port Function Selection I/O/INT: Left position I/O, Right position INT

Expand 11 Click electrical specifications

Description	Min	Typ	Max	Unit
Supply Voltage	3.3	-	5	V

Software Support

We provide a library for the Expand 11 Click as well as a demo application (example), developed using Mikroe compilers. The demo can run on all the main Mikroe development boards.

Package can be downloaded/installed directly from NECTO Studio Package Manager(recommended), downloaded from our LibStock™ or found on Mikroe github account.

Library Description

This library contains API for Expand 11 Click driver.

Key functions

- expand11_set_pin_direction This function sets the direction of the selected pins.
- expand11_set_all_pins_value This function sets the value of all output pins.

Mikroe produces entire development toolchains for all major microcontroller architectures.
Committed to excellency, we are dedicated to helping engineers bring the project development up to speed and achieve outstanding results.

ISOQAR REGISTERED
UKAS MANAGEMENT SYSTEMS
ISO 27001: 2013 certification of informational security management system.
ISO 14001: 2015 certification of environmental management system.
OHSAS 18001: 2008 certification of occupational health and safety management system.
TÜV SÜD ISO 9001
ISO 9001: 2015 certification of quality management system (QMS).

MIKROELEKTRONIKA D.O.O, Batajnički drum 23, 11000 Belgrade, Serbia
VAT: SR105917343 Registration No. 20490918
Phone: + 381 11 78 57 600 Fax: + 381 11 63 09 644 E-mail: office@mikroe.com
www.mikroe.com

- expand11_read_port_value This function reads the value of the port input pins.

Example Description

This example demonstrates the use of Expand 11 Click board™ by setting and reading the port state.

The full application code, and ready to use projects can be installed directly from NECTO Studio Package Manager(recommended), downloaded from our LibStock™ or found on Mikroe github account.

Other Mikroe Libraries used in the example:

- MikroSDK.Board
- MikroSDK.Log
- Click.Expand11

Additional notes and informations

Depending on the development board you are using, you may need USB UART click, USB UART 2 Click or RS232 Click to connect to your PC, for development systems with no UART to USB interface available on the board. UART terminal is available in all Mikroe compilers.

mikroSDK

This Click board™ is supported with mikroSDK - Mikroe Software Development Kit. To ensure proper operation of mikroSDK compliant Click board™ demo applications, mikroSDK should be downloaded from the LibStock and installed for the compiler you are using.

For more information about mikroSDK, visit the official page.

Resources

mikroBUS™

mikroSDK

Click board™ Catalog

Click Boards™

ClickID

Downloads

Expand 11 click 2D and 3D files

Expand 11 click example on Libstock

TCA9536 datasheet

Expand 11 click schematic

Mikroe produces entire development toolchains for all major microcontroller architectures.
Committed to excellency, we are dedicated to helping engineers bring the project development up to speed and achieve outstanding results.

ISO 27001: 2013 certification of informational security management system.
ISO 14001: 2015 certification of environmental management system.
OHSAS 18001: 2008 certification of occupational health and safety management system.

ISO 9001: 2015 certification of quality management system (QMS).