HC-STA-B10-DC-PL - Protective cover

1421101

https://www.phoenixcontact.com/us/products/1421101

Please be informed that the data shown in this PDF document is generated from our online catalog. Please find the complete data in the user documentation. Our general terms of use for downloads are valid.



Protective cover, design: B10

Commercial data

Item number	1421101
Packing unit	5 pc
Minimum order quantity	5 pc
Sales key	BF66
Product key	BF7AZC
Catalog page	Page 655 (C-2-2019)
GTIN	4055626251813
Weight per piece (including packing)	7.51 g
Weight per piece (excluding packing)	6.8 g
Customs tariff number	85389099
Country of origin	CN

Technical data

Product properties

Product type	Protective cover
Housing type	Protective cover
Type	B10

Dimensions

Dimensional drawing	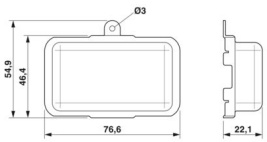
Width	46.4 mm
Height	22.1 mm
Length	76.6 mm

Material specifications

Color	transparent
Material Protective cover	PA
Flammability rating according to UL 94	HB

Environmental and real-life conditions

Ambient conditions

Degree of protection	IP20
Ambient temperature (operation)	0 °C ... 20 °C

Drawings

Dimensional drawing

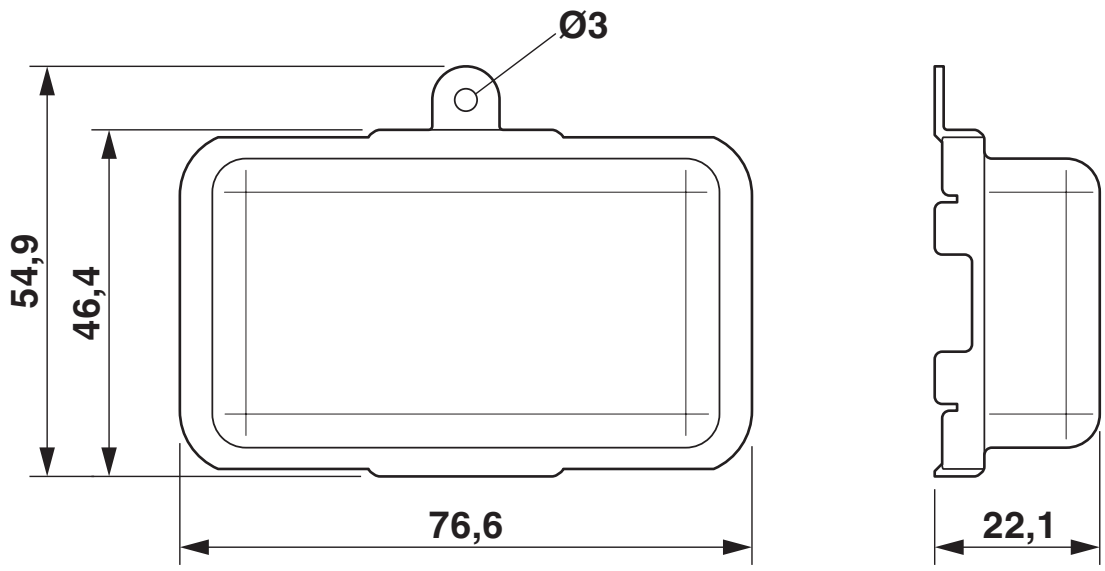

Dimensional drawing

Approvals

To download certificates, visit the product detail page: https://www.phoenixcontact.com/us/products/1421101

DNV
Approval ID: TAE000037S

Classifications

ECLASS

ECLASS-11.0	27440208
ECLASS-12.0	27440208
ECLASS-13.0	27440208

ETIM

ETIM 9.0	EC002314

UNSPSC

UNSPSC 21.0	39121400

Environmental product compliance

EU RoHS

Fulfills EU RoHS substance requirements	Yes, No exemptions

China RoHS

Environment friendly use period (EFUP)	EFUP-E
	No hazardous substances above the limits

EU REACH SVHC

REACH candidate substance (CAS No.)	No substance above 0.1 wt%

Phoenix Contact 2024 © - all rights reserved
https://www.phoenixcontact.com

Phoenix Contact USA
586 Fulling Mill Road
Middletown, PA 17057, United States
(+717) 944-1300
info@phoenixcon.com