103167-3

DO NOT USE FOR NEW DESIGN

TE Internal #: 103167-3

TE Internal Description: 12 MODII HDR DRRA SHRD .100CL

View on TE.com >

Product Compliance

For compliance documentation, visit the product page on TE.com>

EU RoHS Directive 2011/65/EU	Not Compliant
EU ELV Directive 2000/53/EC	Not Compliant
China RoHS 2 Directive MIIT Order No 32, 2016	Restricted Materials Above Threshold
EU REACH Regulation (EC) No. 1907/2006	Current ECHA Candidate List: JUNE 2025 (250) Candidate List Declared Against: JUNE 2025 (250) SVHC > Threshold: Pb (40% in 3433454) Article Safe Usage Statements: Do not eat, drink or smoke when using this product. Wash thoroughly after handling. Recycle if possible and dispose of the article by following all applicable governmental regulations relevant to your geographic location.
Halogen Content	BFR/CFR/PVC Free, but Br/Cl >900 ppm in other sources.
Solder Process Capability	Wave solder capable to 240°C

Product Compliance Disclaimer

This information is provided based on reasonable inquiry of our suppliers and represents our current actual knowledge based on the information they provided. This information is subject to change. The part numbers that TE has identified as EU RoHS compliant have a maximum concentration of 0.1% by weight in homogenous materials for lead, hexavalent chromium, mercury, PBB, PBDE, DBP, BBP, DEHP, DIBP, and 0.01% for cadmium, or qualify for an exemption to these limits as defined in the Annexes of Directive 2011/65/EU (RoHS2). Finished electrical and electronic equipment products will be CE marked as required by Directive 2011/65/EU. Components may not be CE marked. Additionally, the part numbers that TE has identified as EU ELV compliant have a maximum concentration of 0.1% by weight in homogenous materials for lead, hexavalent chromium, and mercury, and 0.01% for cadmium, or qualify for an exemption to these limits as defined in the Annexes of Directive 2000/53/EC (ELV). Regarding the REACH Regulation, the information TE provides on SVHC in articles for this part number is based on the latest European Chemicals Agency (ECHA) 'Guidance on requirements for substances in articles' posted at this URL: https://echa.europa.eu/guidance-documents/guidance-on-reach

Compatible Parts

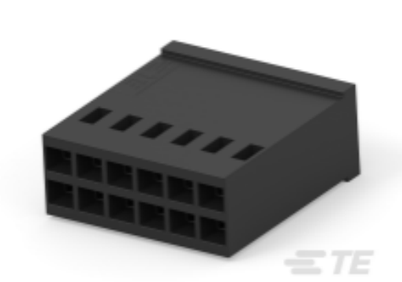

TE Part # 1-86177-3
12 MODIV HSG COMP DR .100CL

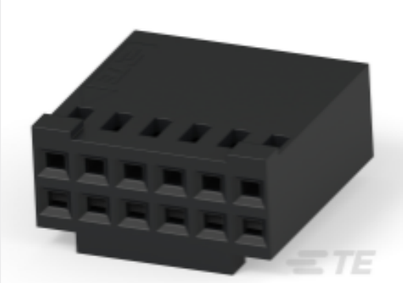

TE Part # 3-87977-1
12 MODIV HSG COMP DR .100 POL

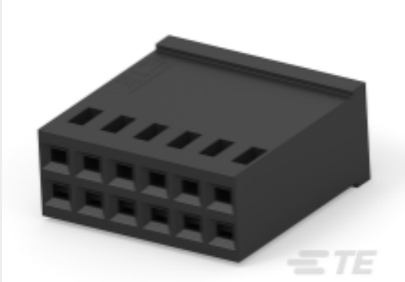

TE Part # 87456-7
12 MODIV HSG COMP DR .100CL

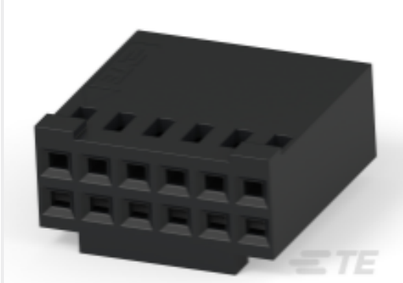

TE Part # 87977-4
12 MODIV HSG DR MRKD .100 POL

Customers Also Bought

TE Part #CONSMB001-G
SMB Jack 50 Ohm PCB Through Hole

TE Part #CAT-M5833-F3492A
Female-on-Board Connector, Top Entry

TE Part #1-215460-6
MICRO-MATCH FEM.SE

TE Part #7-338728-4
MICROM. MOB SMD CON

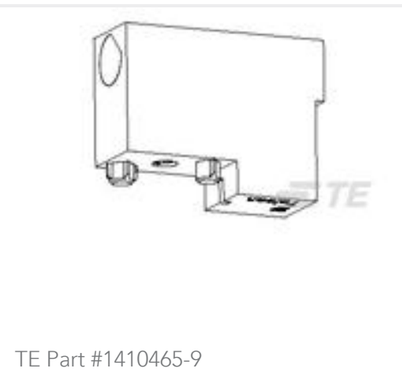

TE Part #1410465-9
VITA 41 KEYED GUIDE MODULE

TE Part #4-2176090-0
RP 1J 0.166W 332K 0.1% 25PPM 1K RL

TE Part #2-2176327-6
CRGP 0805 1K2 1%

TE Part #2-2176327-7
CRGP 0805 1K5 1%

TE Part #5380598-2
RCR AU-SPR SN-CUP 018-040

Documents

Product Drawings

12 MODII HDR DRRA SHRD .100CL

English

CAD Files

Customer View Model

ENG_CVM_CVM_103167-3_R.2d_dxf.zip

English

3D PDF

3D

Customer View Model

ENG_CVM_CVM_103167-3_R.3d_igs.zip

English

Customer View Model

ENG_CVM_CVM_103167-3_R.3d_stp.zip

English

By downloading the CAD file I accept and agree to the Terms and Conditions of use.