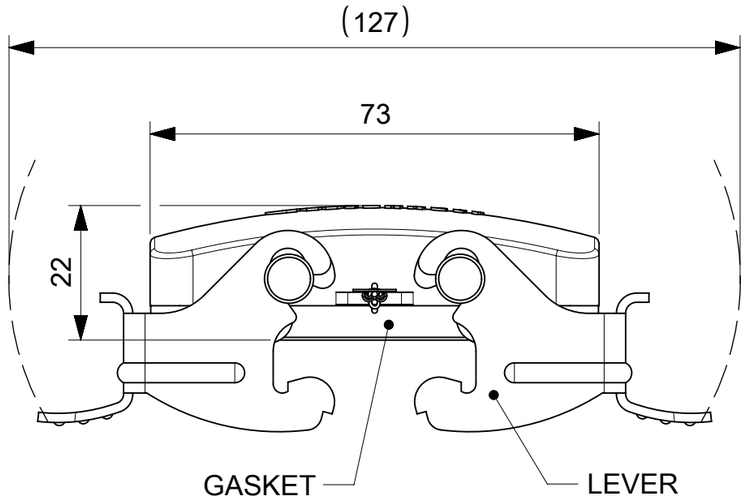

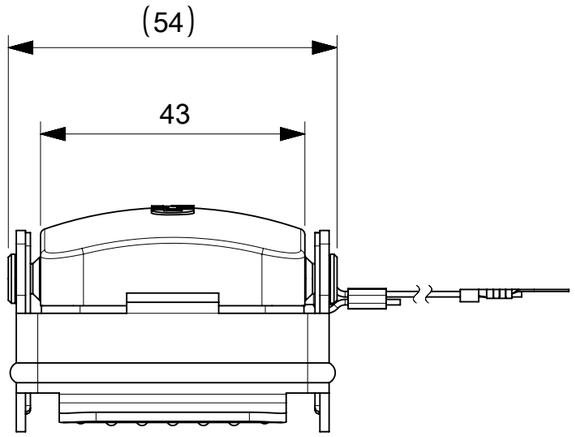

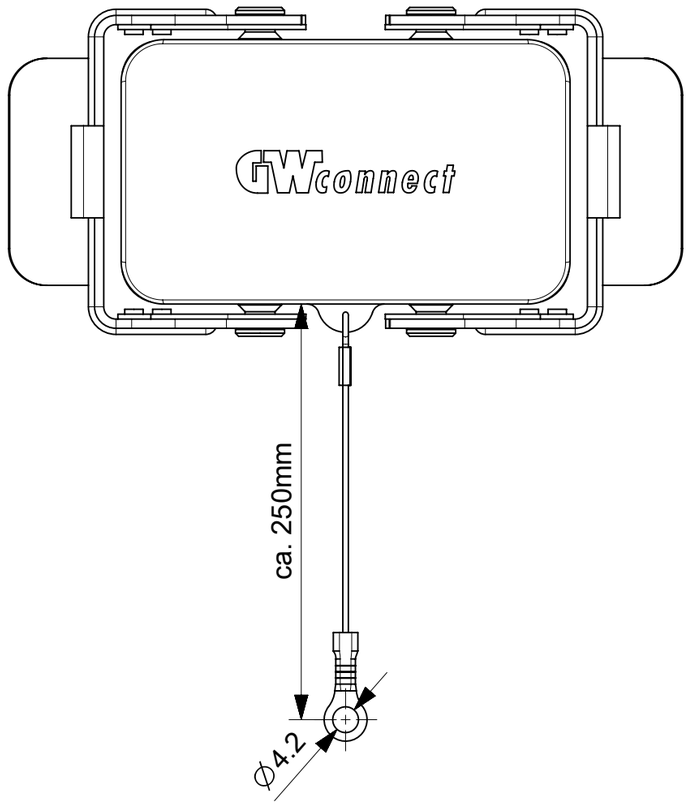

TABLE 1	PRODUCTS TABLE	
MATERIAL No.	Eng.No.	TYPE
0936011797	7810.6809.0	STD / STD-HV
0936011798	7810.6809.1	HE / HE-HV
0936011799	7810.6809.4	EMC

TABLE 2	PRODUCTS VERSION	
TYPE	DESCRIPTION	COLOR
STD	Standard version	Grey RAL 7037
STD-HV	Standard version for High Voltage inserts	
HE	Hars Enviromental version	Black RAL 9005
HE-HV	Hars Enviromental version for High Voltage inserts	
EMC	Electromagnetic compatibility version	Aluminum

THIS DRAWING CONTAINS INFORMATION THAT IS PROPRIETARY TO MOLEX ELECTRONIC TECHNOLOGIES, LLC AND SHOULD NOT BE USED WITHOUT WRITTEN PERMISSION

DIMENSION UNITS	SCALE
mm	1:1

GENERAL TOLERANCES (UNLESS SPECIFIED)

ANGULAR TOL	±	0.1 °
4 PLACES	±	
3 PLACES	±	
2 PLACES	±	
1 PLACE	±	0.1
0 PLACES	±	0.3

DRAFT WHERE APPLICABLE MUST REMAIN WITHIN DIMENSIONS

CURRENT REV DESC:

EC NO: 659372
DRWN: DMERONI 2019/08/08
CHK'D: DMERONI 2021/03/26
APPR: MBIZZOZERO 2021/03/27

INITIAL REVISION:
DRWN: DMERONI 2019/08/08
APPR: MBIZZOZERO 2021/03/27

FIRST ANGLE PROJECTION | DRAWING: A3-SIZE | SERIES: 93601

molex

10B COVER WITH GASKET, 2 LEVERS SERIES

PRODUCT CUSTOMER DRAWING

DOCUMENT NUMBER	DOC TYPE	DOC PART	REVISION
936011797	PSD	000	A

MATERIAL NUMBER	CUSTOMER	SHEET NUMBER
SEE TABLE 1	GENERAL MARKET	1 OF 1

DOCUMENT STATUS	P1	RELEASE DATE	2021/03/27 16:32:40

FORMAT: master-lb-prod-A3
REVISION: H
DATE: 2018/01/18