Data sheet



M40E-026000RR0

M4000 Standard

SAFETY MULTIBEAM SENSORS

SICK
Sensor Intelligence.



Illustration may differ

Ordering information

Type	part no.
M40E-026000RR0	1200018

Other models and accessories ➜ www.sick.com/M4000_Standard

Detailed technical data

Features

Scanning range	0.5 m ... 70 m, configurable
Low scanning range	0.5 m ... 20 m
Great scanning range	9 m ... 70 m
Number of beams	2
Beam separation	600 mm
Response time	10 ms
Synchronization	Optical synchronization
Specialty	Without additional options

Safety-related parameters

Type	Type 4 (IEC 61496-1)
Safety integrity level	SIL 3 (IEC 61508)
Category	Category 4 (EN ISO 13849)
Performance level	PL e (EN ISO 13849)
PFH_D (mean probability of a dangerous failure per hour)	6.6×10^{-9} (EN ISO 13849)
T_M (mission time)	20 years (EN ISO 13849)
Safe state in the event of a fault	At least one OSSD is in the OFF state.

Functions

	Functions	Delivery status
Beam coding	✓	Uncoded
Restart interlock	✓	Internal
External device monitoring (EDM)	✓	Activated
Configurable scanning range	✓	0.5 m ... 20 m

Configurable application diagnostic output	✓	Contamination (OWS)

Interfaces

System connection	Male connector M12, 8-pin
Permitted cable length	15 m [1]
Permitted cross-section	≥ 0.25 mm²
Configuration method	Configuration buttons
Display elements	LEDs 7-segment display

[1] Depending on load, power supply and wire cross-section. The technical specifications must be observed.

Electronics

Protection class	III (IEC 61140)
Supply voltage V_S	24 V DC (19.2 V DC ... 28.8 V DC) [1]
Residual ripple	≤ 10 % [2]
Power consumption	≤ 0.6 A [3]
Output signal switching devices (OSSDs)	2 PNP semiconductors, short-circuit protected, cross-circuit monitored [4]
ON state, switching voltage HIGH	24 V DC (V_S – 2.25 V DC ... V_S)
OFF state, switching voltage LOW	≤ 2 V DC
Current-carrying capacity per OSSD	≤ 500 mA

[1] The external voltage supply must be capable of buffering brief mains voltage failures of 20 ms as specified in EN 60204-1. Suitable power supplies are available as accessories from SICK.
[2] Within the limits of V_S.
[3] Without load.
[4] Applies to the voltage range between –30 V and +30 V.

Mechanics

Dimensions	See dimensional drawing
Housing cross-section	52 mm x 55.5 mm
Material	
Housing	Aluminum alloy ALMGSI 0.5, powder coated
Front screen	Polycarbonate, scratch-resistant coating

Ambient data

Enclosure rating	IP65 (EN 60529)
Ambient operating temperature	–30 °C ... +55 °C
Storage temperature	–30 °C ... +70 °C
Air humidity	15 % ... 95 %, Non-condensing
Vibration resistance	5 g, 10 Hz ... 55 Hz (EN 60068-2-6)
Shock resistance	10 g, 16 ms (EN 60068-2-27)

Other information

Wave length	850 nm

Certificates

EU declaration of conformity	✓
UK declaration of conformity	✓

ACMA declaration of conformity	✓
Moroccan declaration of conformity	✓
China-RoHS	✓
ULus approval	✓
cUL approval	✓
EC-Type-Examination approval	✓

Classifications

ECLASS 5.0	27272703
ECLASS 5.1.4	27272703
ECLASS 6.0	27272703
ECLASS 6.2	27272703
ECLASS 7.0	27272703
ECLASS 8.0	27272703
ECLASS 8.1	27272703
ECLASS 9.0	27272703
ECLASS 10.0	27272703
ECLASS 11.0	27272703
ECLASS 12.0	27272703
ETIM 5.0	EC001832
ETIM 6.0	EC001832
ETIM 7.0	EC001832
ETIM 8.0	EC001832
UNSPSC 16.0901	46171620

Dimensional drawing

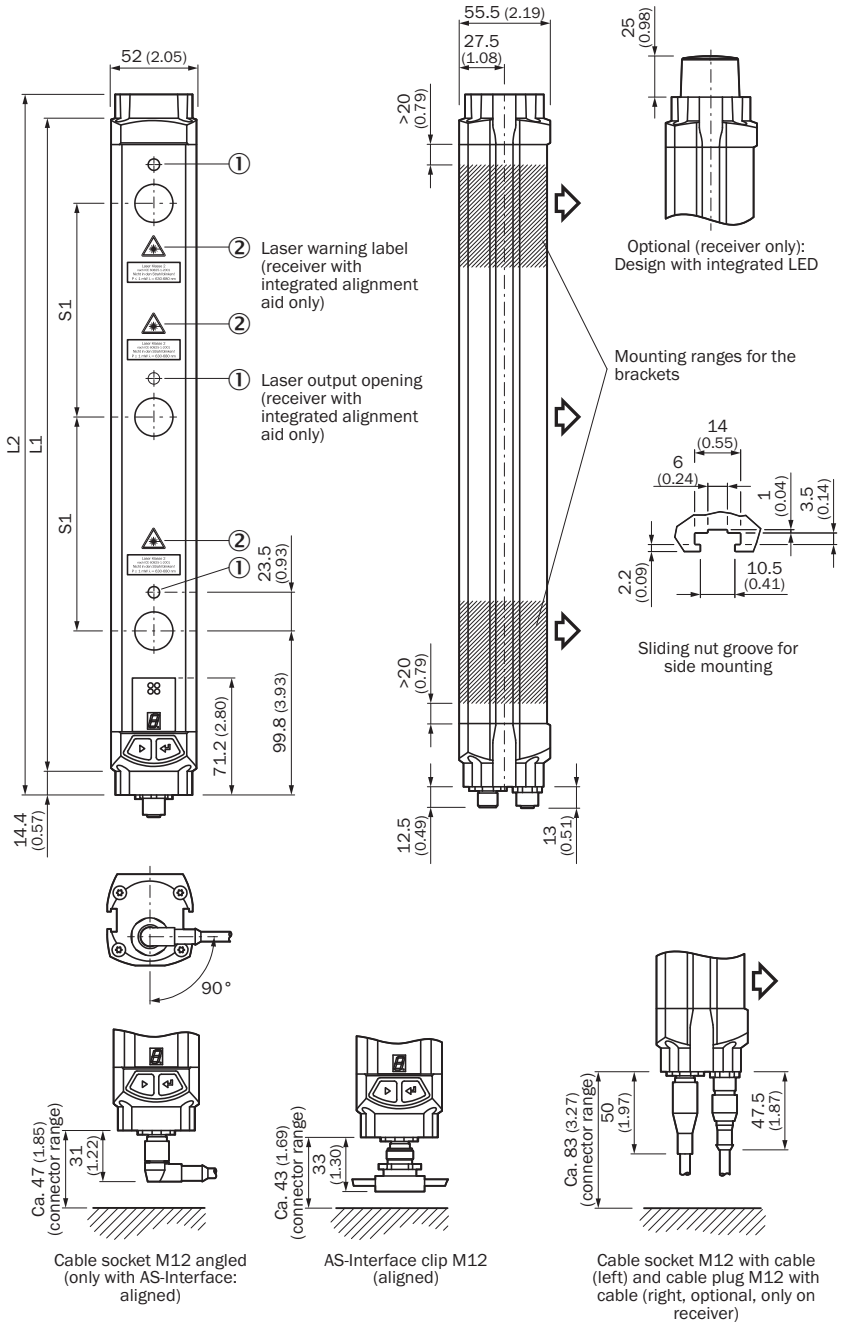

Dimensions in mm (inch)
illustration sender (receiver mirror image)

Number of beams	Beam separation S1	L1	L2
2	500 (19.69)	643 (25.31)	672 (26.46)
	600 (23.62)	743 (29.25)	772 (30.39)
3	220 (8.66)	583 (22.95)	612 (24.09)
	400 (15.75)	943 (37.13)	972 (38.27)
	450 (17.72)	1,043 (41.06)	1,072 (42.20)
4	220 (8.66)	803 (31.61)	832 (32.76)

Number of beams	Beam separation S1	L1	L2
	300 (11.81)	1,043 (41.06)	1,072 (42.20)
5	220 (8.66)	1,023 (40.28)	1,052 (41.42)
6		1,243 (48.94)	1,272 (50.08)
7		1,462 (57.56)	1,491 (58.70)
8		1,682 (66.22)	1,711 (67.36)

Recommended accessories

Other models and accessories ➜ www.sick.com/M4000_Standard

	Brief description	Type	part no.
Mounting systems			
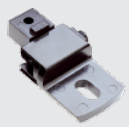	• **Description:** Mounting kit 6, side bracket, rotatable • **Material:** Zinc diecast • **Details:** Zinc diecast • **Packing unit:** 4 pieces • **Suitable for:** All protective field heights	BEF-1SHABAZN4	2019506
	• **Description:** Mounting kit 1, mounting bracket, rigid, L-shaped, including fixing screws and washers • **Packing unit:** 4 pieces • **Suitable for:** All protective field heights	BEF-3WNGBAST4	7021352
	• **Description:** Mounting kit 12, rotatable, swivel mount • **Packing unit:** 4 pieces • **Suitable for:** All protective field heights	BEF-2SMGEAKU4	2030510
Commissioning aids and test equipment			
	• **Product:** Alignment aids • **Dimensions (W x H x L):** 19 mm 67.3 mm 66.9 mm • **Description:** Laser alignment aid for various sensors, laser class 2 (IEC 60825). Do not look into the beam!	AR60	1015741
	• **Product:** Alignment aids • **Description:** Adapter AR60 for M4000 and M4000 Curtain	AR60 adapter, M4000	4040006

SICK AT A GLANCE

SICK is one of the leading manufacturers of intelligent sensors and sensor solutions for industrial applications. A unique range of products and services creates the perfect basis for controlling processes securely and efficiently, protecting individuals from accidents and preventing damage to the environment.

We have extensive experience in a wide range of industries and understand their processes and requirements. With intelligent sensors, we can deliver exactly what our customers need. In application centers in Europe, Asia and North America, system solutions are tested and optimized in accordance with customer specifications. All this makes us a reliable supplier and development partner.

Comprehensive services complete our offering: SICK LifeTime Services provide support throughout the machine life cycle and ensure safety and productivity.

For us, that is “Sensor Intelligence.”

WORLDWIDE PRESENCE:

Contacts and other locations –www.sick.com