EV7751-F-00A

2X20W Stereo BTL Fix Frequency Class D Audio Amplifier Evaluation Board

The Future of Analog IC Technology

DESCRIPTION

The EV7751-F-00A is the evaluation board for the MP7751, a 20W stereo BTL Fix Freuquency Class D Audio Amplifier. It is one of MPS' products of fully integrated audio amplifiers which dramatically reduce solution size by integrating the following:

- 240mΩ power MOSFETs
- Startup / Shutdown pop elimination
- Short circuit protection circuits
- Advanced EMI performance

The MP7751 utilizes Bridge Tied Load output structure capable of delivering stereo 20W into 8Ω speakers. It features in automatic shutdown function which can save power in battery-used system. The PLIMIT function is useful for limiting total output power by simply adjust a DC reference voltage at PLIMIT pin. MPS Class D Audio Amplifiers exhibit the high fidelity of a Class A/B amplifier at high efficiency.

FEATURES

- 20W Stereo BTL Output at V_{DD} = 18V into 8Ω loads
- 9.5W Stereo BTL Output at V_{DD} = 12V into 8Ω loads
- Better than 90% Efficiency at 9.5W x 2 and V_{DD}=12V with 8Ω load, Stereo
- Low Noise (120μV Typical)
- 5V to 26V Operation from a Single Supply

APPLICATIONS

- TV
- DVD Receiver
- Active Speakers
- Home Theater

All MPS parts are lead-free and adhere to the RoHS directive. For MPS green status, please visit MPS website under Products, Quality Assurance page.

"MPS" and "The Future of Analog IC Technology" are registered trademarks of Monolithic Power Systems, Inc.

ELECTRICAL SPECIFICATIONS

Parameter	Symbol	Value	Units
Supply Voltage	V_{DD}	5~26	V

EV7751-F-00A EVALUATION BOARD



(L x W x H) 3.3" x 3.1" x 0.8"
8.5cm x 8.0cm x 2.0cm

Board Number	MPS IC Numbe
EV7751-F-00A	MP7751GF

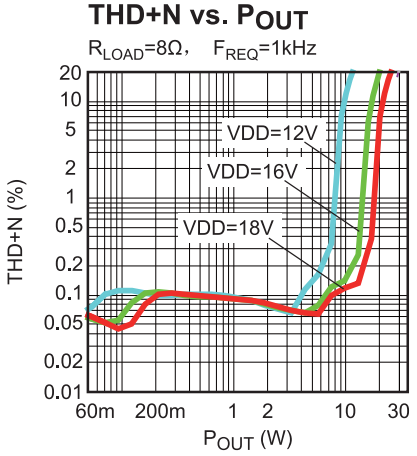

MPS Proprietary Information. Patent Protected. Unauthorized Photocopy and Duplication Prohibited.
© 2014 MPS. All Rights Reserved.

EVALUATION BOARD SCHEMATIC

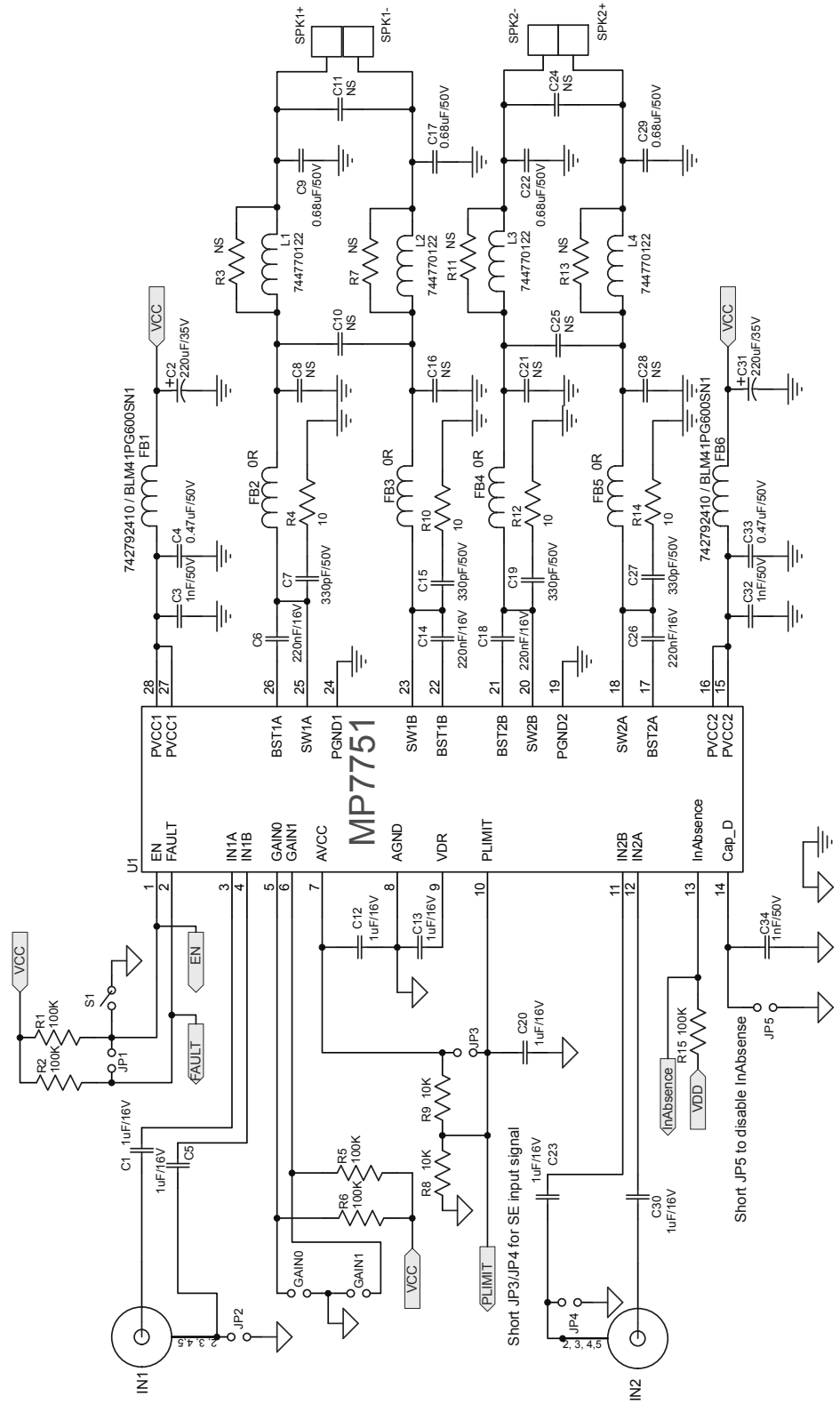

MPS Proprietary Information. Patent Protected. Unauthorized Photocopy and Duplication Prohibited.
© 2014 MPS. All Rights Reserved.

EV7751-F-00A BILL OF MATERIALS

Qty	Designator	Value	Description	Package	Manufacture	Manufacture_PN
7	C1, C5, C12, C13, C20, C23, C30	1uF/16V	Ceramic Capacitor;16V; X7R	0603	muRata	GRM188R71C105KA12D
2	C2, C31	220uF/35V	Electroelytic Capacitor;35V	SMD	JiangHai	VTD-35V220
3	C3, C32,C34	1nF/50V	Ceramic Capacitor;50V; C0G	0603	muRata	GRM1885C1H102JA01D
4	C8, C16, C21, C28,	NS				
2	C4, C33	470nF	Ceramic Capacitor;50V; X7R	0805	muRata	GRM21BR71H474KA88
4	C6,C14, C18, C26	220nF	Ceramic Capacitor;16V; X7R	0402	muRata	GRM155R71C224KA12D
4	C7, C15, C19, C27	330pF	Ceramic Capacitor;50V; X7R	0402	TDK	C1005X7R1H331K
2	C11, C24,	NS				
2	C10, C25	NS	Ceramic Capacitor;50V; C0G	0603	muRata	GRM1885C1H102JA01D
4	C9,C17C22, C29	0.68uF	Ceramic Capacitor;50V; X7R	1206	muRata	GRM31MR71H684KA88L
3	R1, R8, R9	10K	Film Resistor;1%	0603	Yageo	RC0603FR-0710KL
4	R2, R5, R6, R15	100K	Film Resistor;1%	0603	Yageo	RC0603FR-07100KL
4	R3, R7, R11, R13	NS				
4	R4, R10, R12, R14	10	Film Resistor;1%	0603	Yageo	RC0603FR-0710RL
2	FB1, FB6	BLM41PG600SN1L	Magnetic Bead;6A	1806	Wurth	BLM41PG600SN1L
4	FB2, FB3, FB4, FB5	0R	Film Resistor;1%,1206	1206	Yageo	RC1206FR-070RL
4	L1, L2, L3, L4	22uH	Inductor;22uH; 43mohm;5A	SMD	Wurth	744770122
7	GAIN0, GAIN1, JP1, JP2, JP3, JP4, JP5	Jumper	2Pin 2.54mm Jumper			

MPS Proprietary Information. Patent Protected. Unauthorized Photocopy and Duplication Prohibited.
© 2014 MPS. All Rights Reserved.

EV7751-F-00A BILL OF MATERIALS *(continued)*

Qty	Designator	Value	Description	Package	Manufacture	Manufacture_PN
1	S1	Button	Button			
2	IN1, IN2	RCA	Connector, RCA Jack,			
6	EN, FAULT, ,InAbsence, PLIMIT GND	TP	Connector;1.0 Test Point			
3	GND, SPK1-, SPK2-,	Banana Jack	Connector;Black,			
3	SPK1+, SPK2+, VCC	Banana Jack	Connector;Red			
1	U1	MP7751	Class D Amplifier	TSSOP28 /EP	MPS	MP7751GF

MPS Proprietary Information. Patent Protected. Unauthorized Photocopy and Duplication Prohibited.
© 2014 MPS. All Rights Reserved.

PRINTED CIRCUIT BOARD LAYOUT

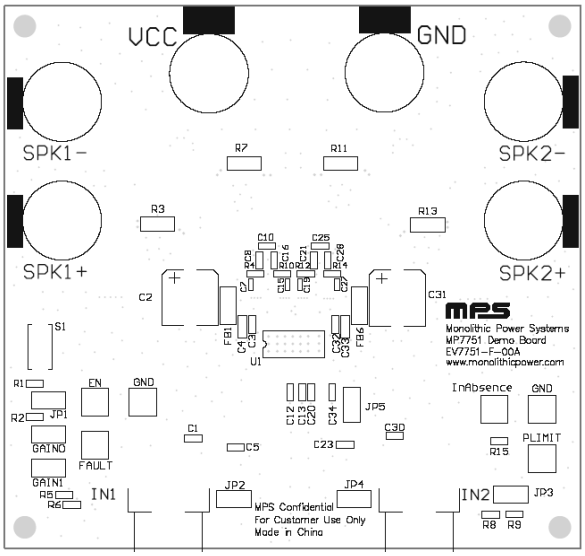

Figure 1—Top Silk Layer

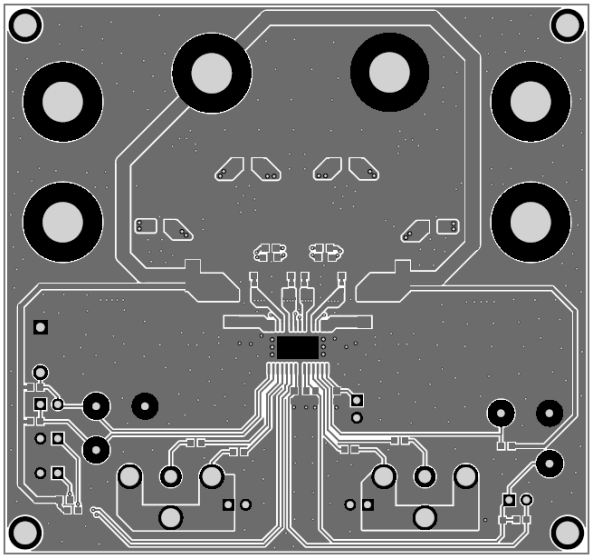

Figure 2—Top Layer

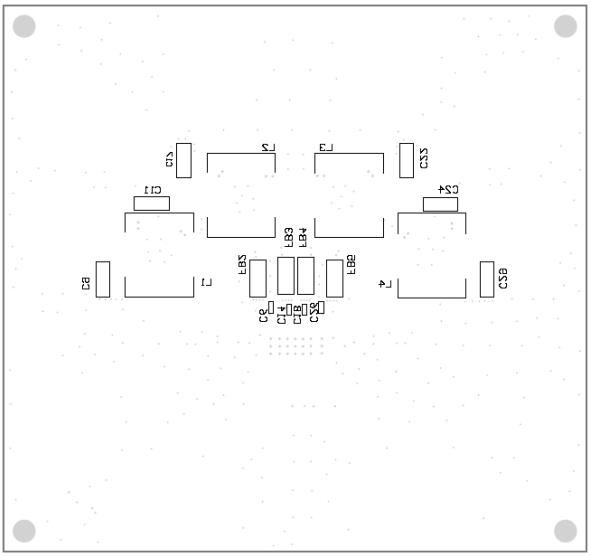

Figure 3—Bottom Silk Layer

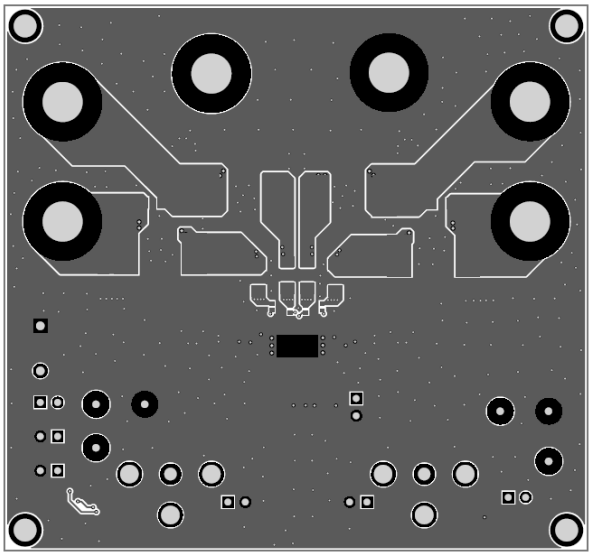

Figure 4—Bottom Layer

MPS Proprietary Information. Patent Protected. Unauthorized Photocopy and Duplication Prohibited.
© 2014 MPS. All Rights Reserved.

QUICK START GUIDE

EV7751-F-00A is set up from the factory for 5V to 26V single supply operating voltage with single-ended signal inputs. To use differential signal inputs, please remove the jumpers from JP2 and JP4.

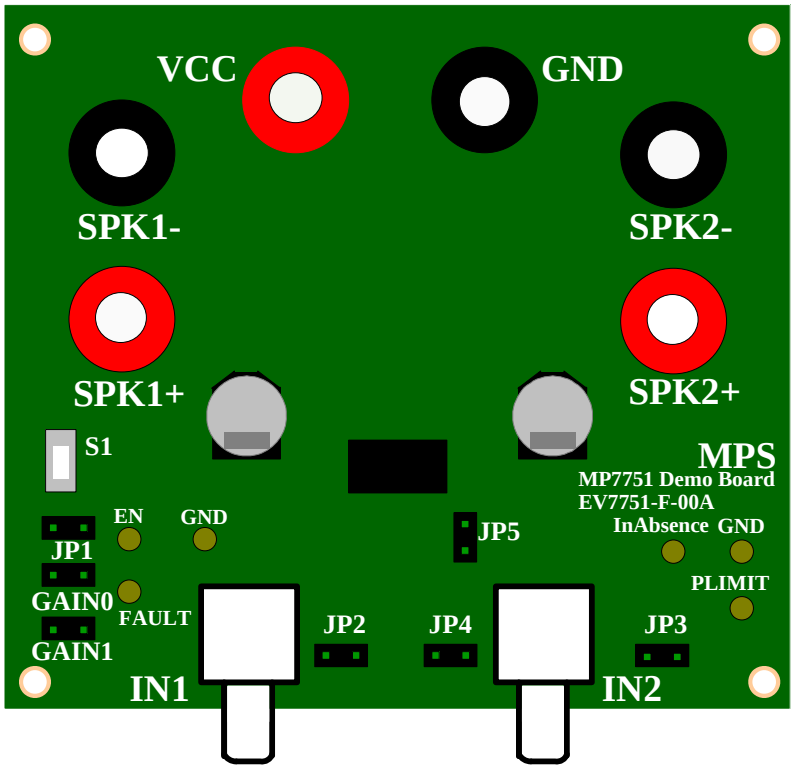

Figure 5—EV7751-F-00A Connection Diagram

1. Power, Signal and Load Impedance Requirements
   a. Power supply: 5V to 26V (12V typical), 4A maximum (1.8A typical).
   b. 0V to 2VRMS (max) audio signal source.
   c. Speaker: typically 4Ω to 8Ω (8Ω typical).
2. Setup Condition for 12V Operation
   a. Adjust the DC power supply to 12V (do not turn on).
   b. Connect the outputs to the external speakers.
   c. Connect the DC power supply to the power input terminals.
   d. Set the voltage gain by GAIN0 and GAIN1 jumpers, default voltage gain=20dB.
   e. Set the PLIMIT voltage to target output power level. Default setting is 1/2 AVCC, 2.75V equivalent.
   f. Connect the audio input signal source to the amplifier inputs (IN1 and IN2).
3. Music Turn-on/off Sequence
   a. Push button S1 to disable this EVB, release S1 to enable (default position).
   b. Turn-on/off the power supply.

MPS Proprietary Information. Patent Protected. Unauthorized Photocopy and Duplication Prohibited.
© 2014 MPS. All Rights Reserved.

APPLICATION INFORMATION

1. Typical Output Power vs. PLIMIT Voltage Table

Table 1: Power Limit Typical Operation

Test Condition	PLIMIT Voltage	Output Voltage (Vp-p)	Output Power (~10% THD)
VDD=12V, Vin=1Vrms, Load=8Ω, Gain=20dB	0.80V	14.9	5.0W
VDD=18V, Vin=1Vrms, Load=8Ω, Gain=20dB	0.80V	14.9	5.0W
VDD=18V, Vin=1Vrms, Load=8Ω, Gain=20dB	1.44V	23.6	10.0W
VDD=24V, Vin=1Vrms, Load=8Ω, Gain=20dB	1.44V	23.6	10.0W

PLIMIT adjust methods:

a. Adjust resistor divider R8 and R9 to set PLIMIT reference voltage.
b. Short JP3 to connect PLIMIT pin to AVCC directly. (disable power limit function)

2. Voltage Gain Setting Table

Table 2: Gain Setting

GAIN0	GAIN1	Typical GAIN (dB)	Typical Input Impedance (kΩ)
0	0	20	75
1	0	26	50
0	1	32	30
1	1	36	20

3. InAbsence Function

InAbsence function and its delay time are controlled by JP5 and C34.

a. Short JP5 to disable InAbsence function.

b. Adjust C_R to set delay time after input signal is absence. Delay time is defined as:

$$T_{delay} = 1.6 \times 10^8 \times C_R [sec]$$

C_R = C34 in EV7751-F-00A, a 1nF capacitor provides ~160ms delay time.

For more information, please consult MP7751 datasheet.

NOTICE: The information in this document is subject to change without notice. Please contact MPS for current specifications. Users should warrant and guarantee that third party Intellectual Property rights are not infringed upon when integrating MPS products into any application. MPS will not assume any legal responsibility for any said applications.

MPS Proprietary Information. Patent Protected. Unauthorized Photocopy and Duplication Prohibited.
© 2014 MPS. All Rights Reserved.