WR-112 Waveguide Standard Gain Horn Antenna Operating from 7.05 GHz to 10 GHz 10 dBi Gain with UG-51/U-Square Flange and Cage Style Mount



PE1WAN112-10

Features

- WR-112 Rectangular Waveguide Interface
- 7.05 GHz to 10 GHz
- 10 dBi Nominal Gain
- UG-51/U-Square Flange
- Ruggedized Aluminum Cage-Style Mount
- H Band

Applications

- Antenna Measurements
- Wireless Communication
- Laboratory Use
- Microwave Radio Systems

Description

The PE1WAN112-10 H Band standard gain horn antenna (also known as waveguide horn) from Pasternack has a nominal gain of 10 dBi. This WR-112 standard gain horn has a UG-51/U-Square type flange and integrated cage-style mount. The mount is a ruggedized aluminum mounting solution that integrates with test and measurement positioning systems, ensuring precise alignment and protection of the antenna. The Pasternack 10 dBi WR-112 horn antenna operates from 7.05 GHz to 10 GHz. The WR-112 PE1WAN112-10 waveguide horn is powder coated aluminum for added protection and corrosion resistance. It is part of over 40,000 RF, microwave and millimeter wave components available from Pasternack.

Waveguide standard gain horn antennas are used in a wide variety of applications due to their high power handling capability, low loss, high directivity, and near constant electrical performance. Pasternack's WR-112 standard gain horns are available in 10, 15 and 20 dBi models with pyramidal shape and rectangular input. Our WR-112 standard gain horn antennas can ship worldwide the same day as it is purchased as with our other available RF parts.

Configuration

Design	WR-112
Polarization	Linear

Electrical Specifications

Description	Minimum	Typical	Maximum	Units
Frequency Range	7.05		10	GHz
Nominal Gain		10		dB
Horizontal Half Power Beam Width		52.1		Degrees
Vertical Half Power Beam Width		51.6		Degrees
VSWR		1.3:1		

Mechanical Specifications

Size

Length	6.83 in [173.48 mm]
Width	4.33 in [109.98 mm]
Height	3.15 in [80.01 mm]
Weight	1.37 lbs [621.42 g]

Waveguide Interface

Waveguide Size	WR-112
Flange Type	Square Cover
Flange Designation	UG-51

© 2023 Infinite Electronics, Inc. Pasternack is a registered trademark of Infinite Electronics, Inc.
+1 (866) 558-2786 | sales@pasternack.com | pasternack.com

WR-112 Waveguide Standard Gain Horn Antenna Operating from 7.05 GHz to 10 GHz 10 dBi Gain with UG-51/U-Square Flange and Cage Style Mount



PE1WAN112-10

Body Material and Plating	Aluminum, Gray

Compliance Certifications (see product page for current document)

Plotted and Other Data

Notes:

Typical Performance Data

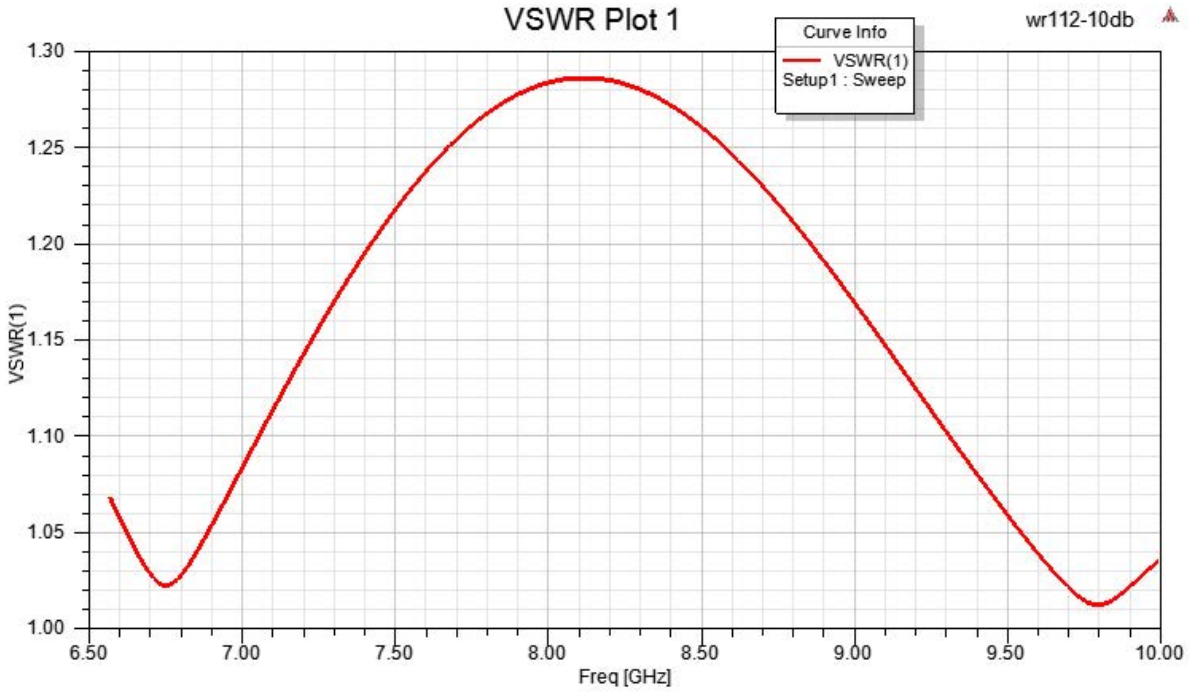

© 2023 Infinite Electronics, Inc. Pasternack is a registered trademark of Infinite Electronics, Inc.

WR-112 Waveguide Standard Gain Horn Antenna
Operating from 7.05 GHz to 10 GHz 10 dBi Gain with
UG-51/U-Square Flange and Cage Style Mount



PE1WAN112-10

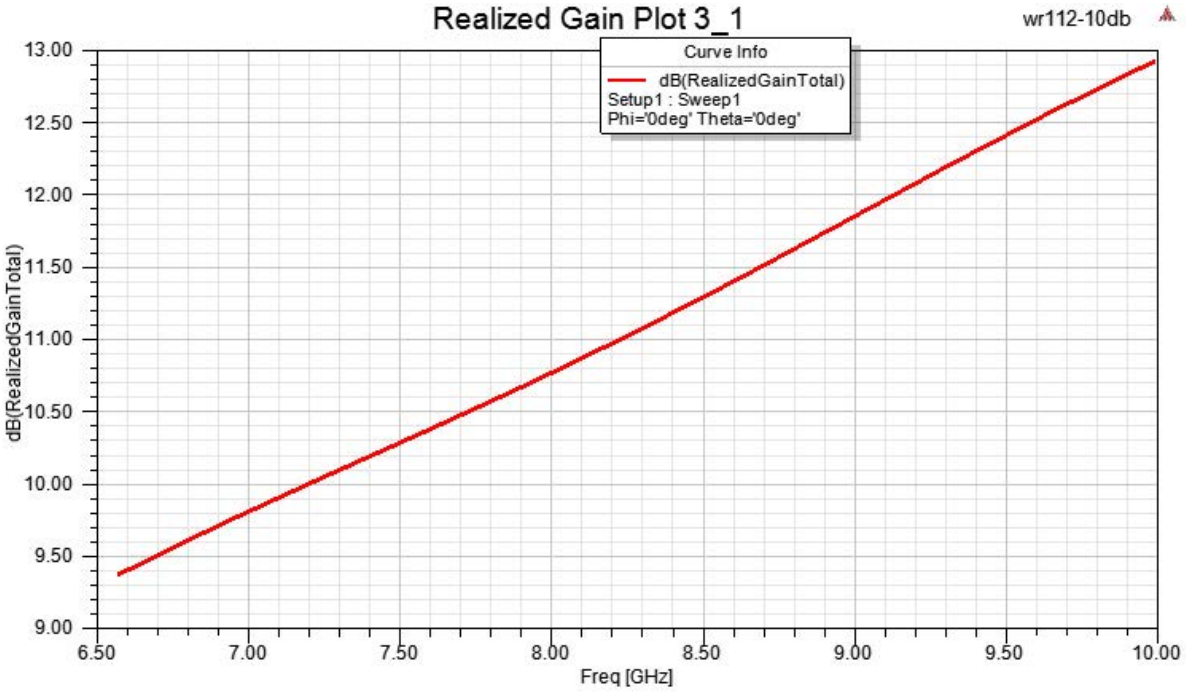

© 2023 Infinite Electronics, Inc. Pasternack is a registered trademark of Infinite Electronics, Inc.

WR-112 Waveguide Standard Gain Horn Antenna Operating from 7.05 GHz to 10 GHz 10 dBi Gain with UG-51/U-Square Flange and Cage Style Mount



PE1WAN112-10

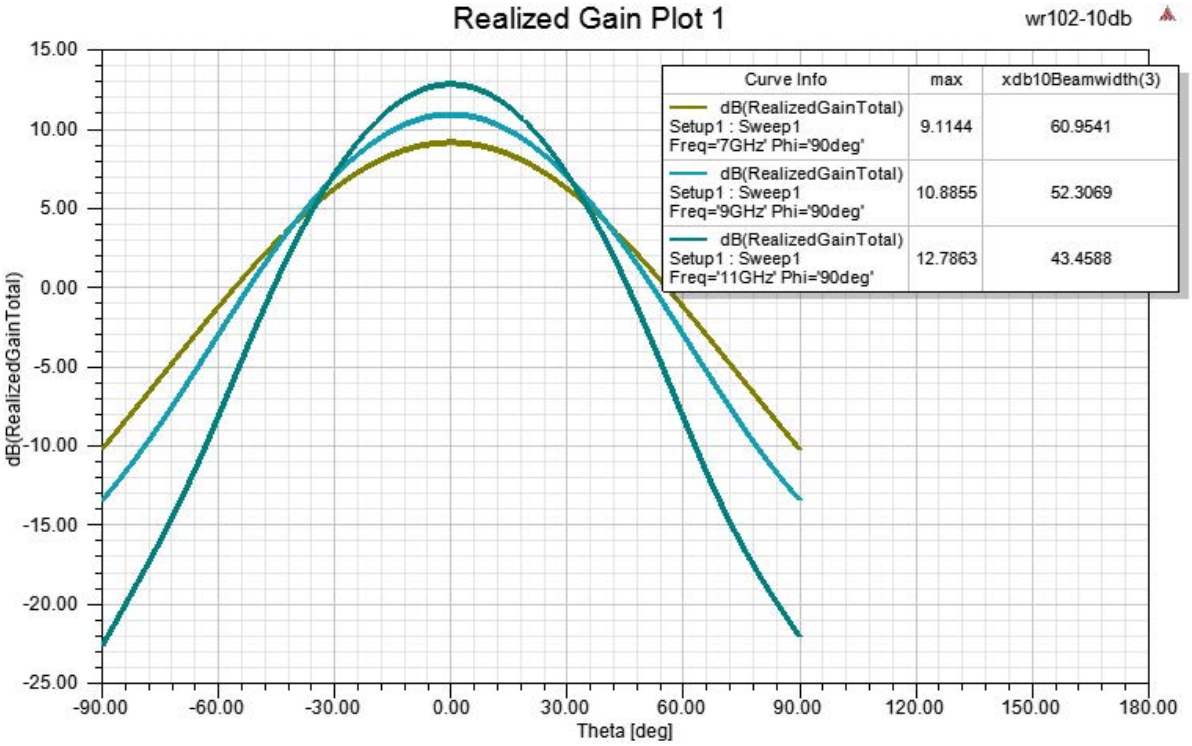

© 2023 Infinite Electronics, Inc. Pasternack is a registered trademark of Infinite Electronics, Inc.

WR-112 Waveguide Standard Gain Horn Antenna Operating from 7.05 GHz to 10 GHz 10 dBi Gain with UG-51/U-Square Flange and Cage Style Mount



PE1WAN112-10

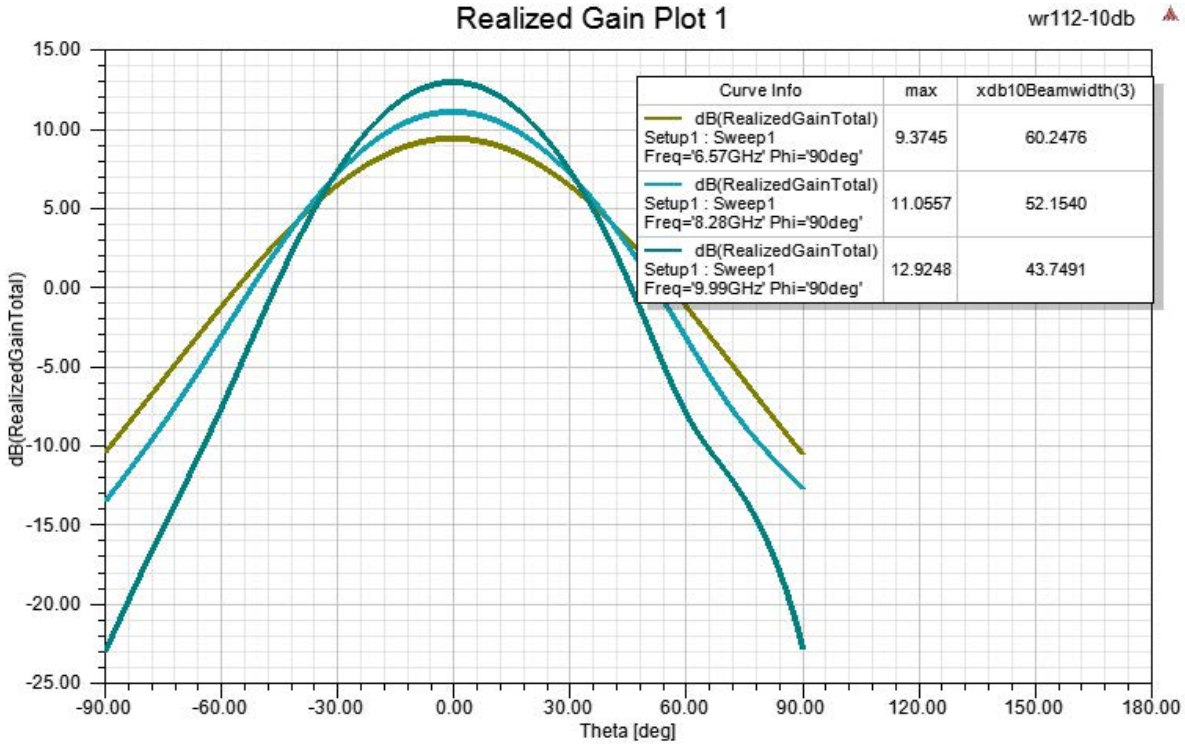

WR-112 Waveguide Standard Gain Horn Antenna Operating from 7.05 GHz to 10 GHz 10 dBi Gain with UG-51/U-Square Flange and Cage Style Mount from Pasternack Enterprises has same day shipment for domestic and International orders. Our RF, microwave and millimeter wave products maintain a 99.4% availability and are part of the broadest selection in the industry.

Click the following link (or enter part number in "SEARCH" on website) to obtain additional part information including price, inventory and certifications: WR-112 Waveguide Standard Gain Horn Antenna Operating from 7.05 GHz to 10 GHz 10 dBi Gain with UG-51/U-Square Flange and Cage Style Mount PE1WAN112-10

URL: https://www.pasternack.com/wr-112-waveguide-gain-horn-antenna-10db-cprg-square-flange-pe1wan112-10-p.aspx

The information contained within this document is accurate to the best of our knowledge and representative of the part described herein. It may be necessary to make modifications to the part and/or the documentation of the part in order to impliment improvements. Pasternack Enterprises reserves the right to make such changes as required. Unless otherwise stated, all specifications are nominal. Pasternack Enterprises does not make any representation or warranty regarding the suitability of the part described herein for any particular purpose, and Pasternack Enterprises does not assume liability arising out of the use of any part or document.

© 2023 Infinite Electronics, Inc. Pasternack is a registered trademark of Infinite Electronics, Inc.

PE1WAN112-10 CAD Drawing

WR-112 Waveguide Standard Gain Horn Antenna Operating from 7.05 GHz to 10 GHz 10 dBi Gain with UG-51/U-Square Flange and Cage Style Mount

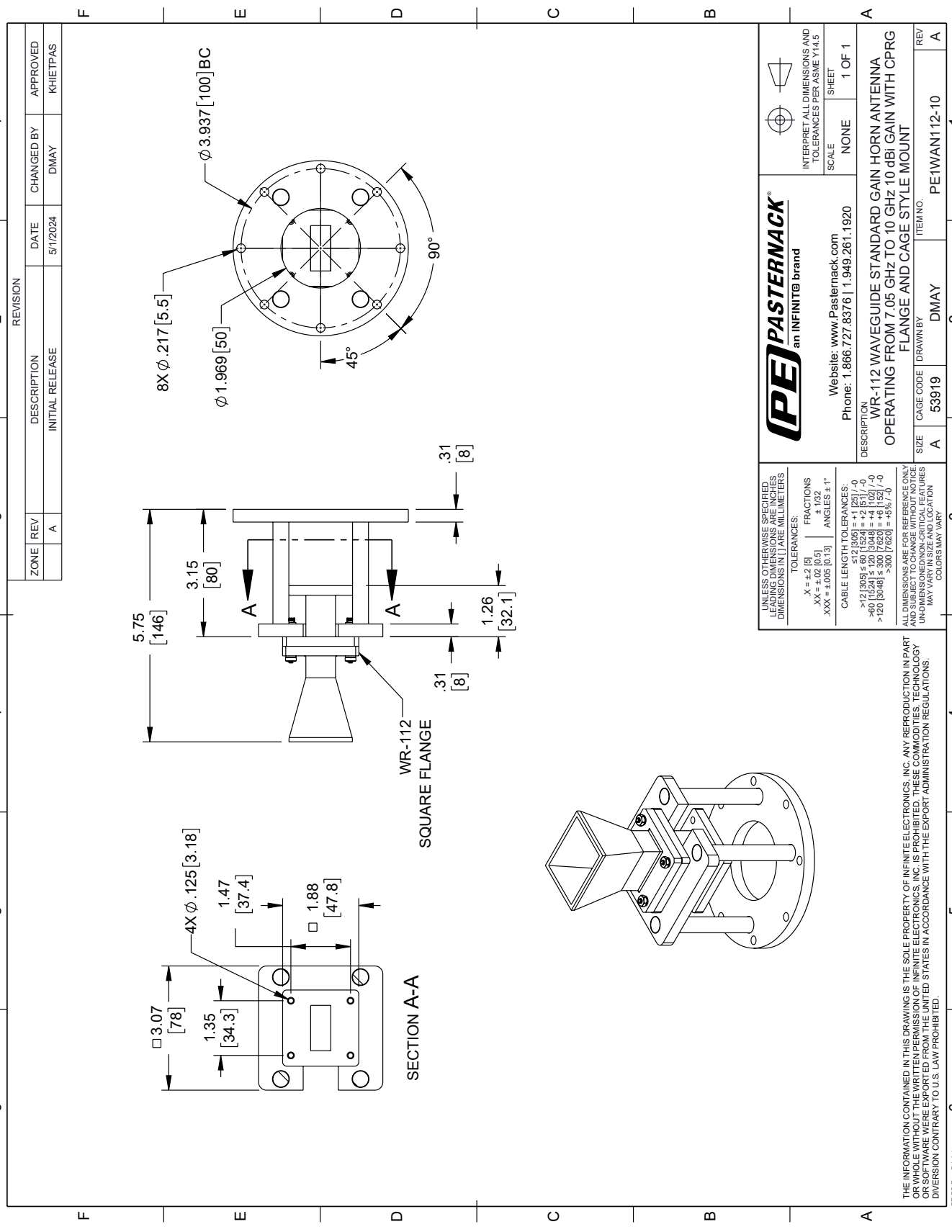

© 2023 Infinite Electronics, Inc. Pasternack is a registered trademark of Infinite Electronics, Inc.