EV7770-F-00A

45W Stereo Single-ended Class D Audio Amplifier Evaluation Board

DESCRIPTION

The EV7770-F-00A is the single-ended configuration evaluation board for the MP7770GF, which can deliver 45W per channel into 4Ω speaker under 36V VDD. It is one of MPS' products of fully integrated audio amplifiers which dramatically reduce solution size by integrating:

- 100mΩ power MOSFETs
- Startup/Shutdown pop elimination
- Short-circuit protection circuits

MPS's class D audio amplifiers exhibit the high fidelity of a Class A/B amplifier at higher efficiencies. The circuit is based on the MPS's proprietary variable-frequency topology, which delivers excellent linearity, fast response time and operates from a single power supply.

ELECTRICAL SPECIFICATIONS

Parameter	Symbol	Value	Units
Supply Voltage	V_{DD}	9.5~36	V

FEATURES

- 2 x 45W Output at V_{DD} = 36V into a 4Ω load, 10% THD
- 2 x 23W Output at V_{DD} = 36V into a 8Ω load, 10% THD
- THD+N = 0.03% at 1W, 8Ω, 1kHz
- 95% Efficiency at 23W and V_{DD}=36V with 8Ω load
- 92% Efficiency at 45W and V_{DD}=36V with 4Ω load
- Low Noise (90μV Typical)
- 9.5V to 36V Operation from a Single Supply

APPLICATIONS

- DVD Receiver
- Mini Combo System
- Home Theater Systems
- Surround Sound Systems
- Audio Docking or High-Power Sound Box

All MPS parts are lead-free and adhere to the RoHS directive. For MPS green status, please visit MPS website under Quality Assurance. "MPS" and "The Future of Analog IC Technology" are Registered Trademarks of Monolithic Power Systems, Inc.

EV7770-F-00A EVALUATION BOARD



(L x W x H) 3.5" x 2.4" x 1.6"
9.0cm x 6.1cm x 4.0cm

Board Number	MPS IC Number
EV7770-F-00A	MP7770GF

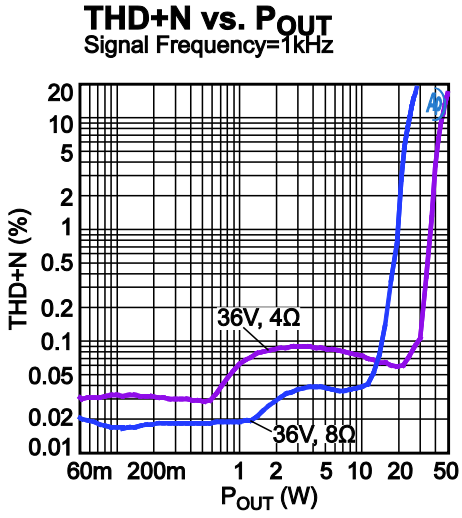

MPS Proprietary Information. Patent Protected. Unauthorized Photocopy and Duplication Prohibited.
© 2013 MPS. All Rights Reserved.

EVALUATION BOARD SCHEMATIC

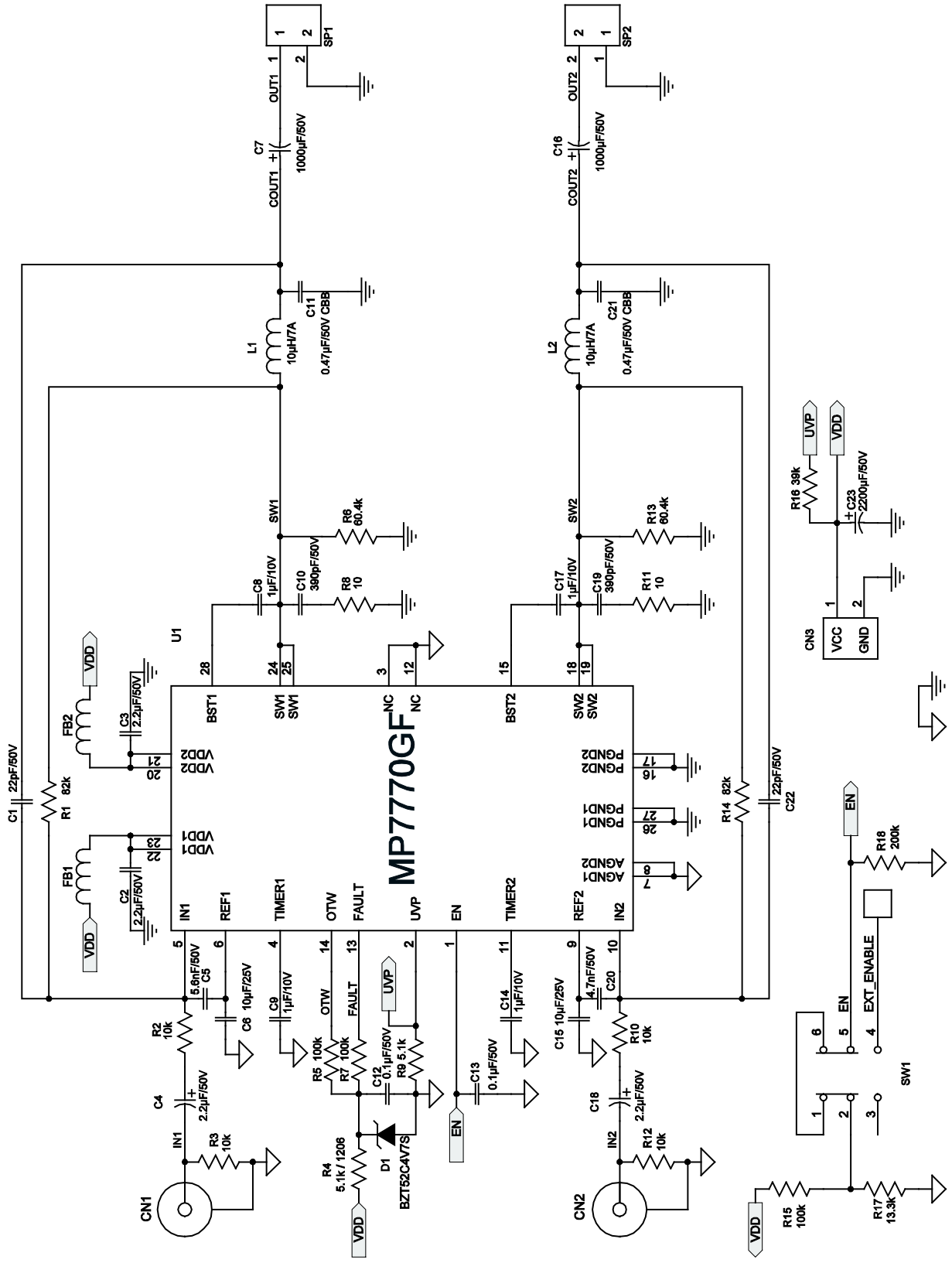

MPS Proprietary Information. Patent Protected. Unauthorized Photocopy and Duplication Prohibited.
© 2013 MPS. All Rights Reserved.

EV7770F-00A BILL OF MATERIALS

Qty	Ref	Value	Description	Package	Manufacturer	Manufacturer P/N
2	C1, C22	22pF	Ceramic Capacitor; 50V;C0G	0603	TDK	C1608C0G1H220J
2	C2, C3	2.2μF	Ceramic Capacitor; 50V;X7R	1206	muRata	GRM31CR71H225KA88L
2	C4, C18	2.2μF	Electrolytic Capacitor; 50V	DIP	Rubycon	2.2uF/50V Rubycon
1	C5	5.6nF	Ceramic Capacitor; 50V;X7R	0603	muRata	GRM188R71H562KA01
2	C6, C15	10μF	Ceramic Capacitor; 25V;X5R	1206	muRata	GRM31CR61E106KA12L
2	C7, C16	1000μF	Electrolytic Capacitor; 50V	DIP	Rubycon	SK050YXA102MEFC
4	C8, C9, C14, C17	1μF	Ceramic Capacitor; 10V;X7R	0603	muRata	GRM188R71A105KA61D
2	C10, C19	390pF	Ceramic Capacitor; 50V;C0G	0603	TDK	C1608C0G1H391J
2	C11, C21	0.47μF	Ceramic Capacitor; 50V;CBB	DIP	Panasonic	ECQV1H474JL
2	C12, C13	0.1μF	Ceramic Capacitor; 50V;X7R	0603	muRata	GRM188R71H104KA93D
1	C20	4.7nF	Ceramic Capacitor; 50V;X7R	0603	TDK	C1608X7R1H472K
1	C23	2200μF	Electrolytic Capacitor; 50V	DIP	Rubycon	SK050YXA222MEFC
2	R1, R14	82k	Film Resistor;1%	0603	Yageo	RC0603FR-0782KL
4	R2, R3, R10, R12	10k	Film Resistor;1%	0603	Yageo	RC0603FR-0710KL
1	R4	5.1k	Film Resistor;1%;1/4W	1206	Yageo	RC1206FR-075K1L
3	R5, R7, R15	100k	Film Resistor;1%;	0603	Yageo	RC0603FR-07100KL
2	R6, R13	60.4k	Film Resistor;1%	0603	Yageo	RC0603FR-0760K4L
2	R8, R11	10	Film Resistor;1%	0603	Yageo	RC0603FR-0710RL
1	R9	5.1k	Film Resistor;1%	0603	Yageo	RC0603FR-075K1L
1	R16	39k	Film Resistor;1%	0603	Yageo	RC0603FR-0739KL
1	R17	13.3k	Film Resistor;1%	0603	Yageo	RC0603FR-0713K3L
1	R18	200k	Film Resistor;1%	0603	Yageo	RC0603FR-07200KL
2	FB1, FB2	6A	Magnetic Bead;6A	1206	muRata	BLM31PG330SN1
2	L1, L2	10μH	13m ohm, 7A AUDIO INDUCTOR	DIP	TOKO	DA1476S-1138FS-1001
1	D1	BZT52C 4V7S	Zener Diode; 4.7V;5mA	SOD-323	Diodes	BZT52C4V7S-7-F
2	CN1, CN2		RCA Connector	DIP		

MPS Proprietary Information. Patent Protected. Unauthorized Photocopy and Duplication Prohibited.
© 2013 MPS. All Rights Reserved.

EV7770F-00A BILL OF MATERIALS *(continued)*

Qty	Ref	Value	Description	Package	Manufacturer	Manufacturer P/N
1	VDD		Female Banana Connector, RED	DIP		
1	GND		Female Banana Connector, BLACK	DIP		
1	SP1		Speaker Connector	DIP		
1	SP2		Speaker Connector	DIP		
1	SW1		DPDT Switch	DIP		
1	U1	MP7770	Class D Audio Amplifier	TSSOP28-EP	MPS	MP7770GF

MPS Proprietary Information. Patent Protected. Unauthorized Photocopy and Duplication Prohibited.
© 2013 MPS. All Rights Reserved.

PRINTED CIRCUIT BOARD LAYOUT

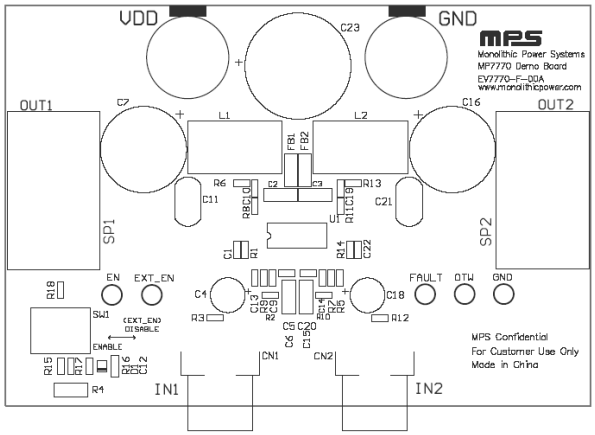

Figure 1—Top Silk Layer

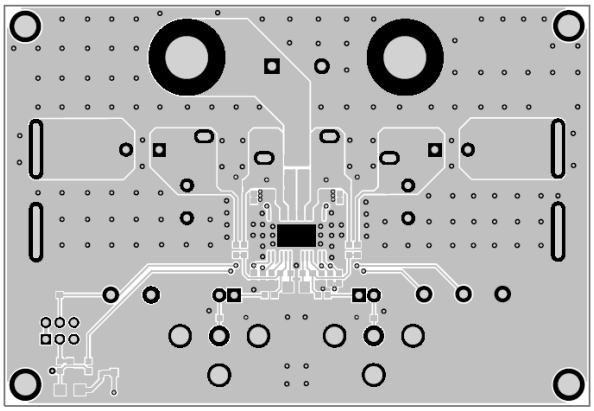

Figure 2—Top Layer

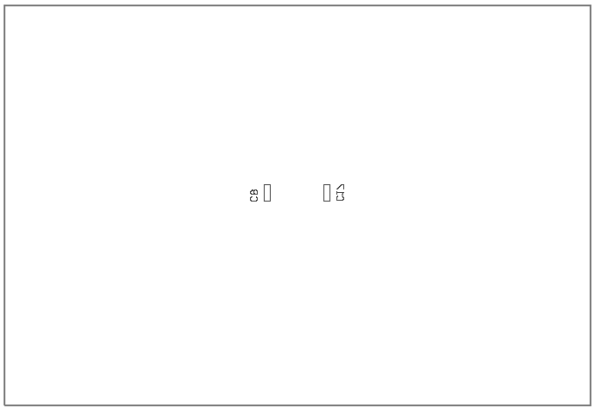

Figure 3—Bottom Silk Layer

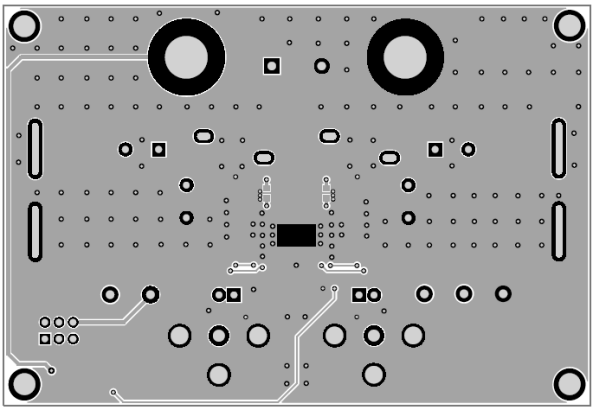

Figure 4—Bottom Layer

MPS Proprietary Information. Patent Protected. Unauthorized Photocopy and Duplication Prohibited.
© 2013 MPS. All Rights Reserved.

QUICK START GUIDE

This evaluation board is set up from the factory for 24V SE operation. To use with 36V (12V) power supply, adjust the components as specified in the 36V (12V) Operation Modifications section below. For more information, consult the MP7770 datasheet for details.

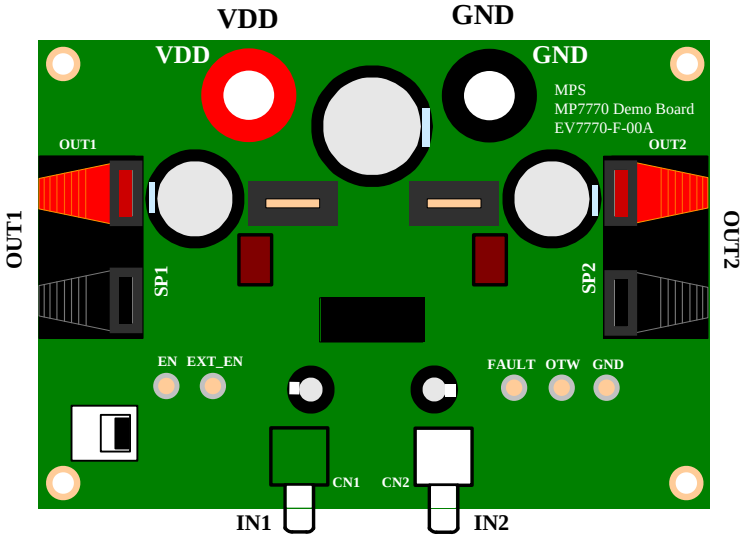

Figure 5—EV7770-F-00A Connection Diagram

1. Power Requirements
    a. Power supply: 9.5V to 36V, 4A maximum.
    b. 0V to 2VRMS (max) audio signal source.
    c. Speaker: typically 3Ω to 8Ω;
2. Setup Condition for 24V Operation
    a. Adjust the power supply to 24V (do not turn on).
    b. Connect the outputs to the external speakers.
    c. Connect the power supply to the VDD terminals.
    d. Set the enable switch to the DISABLE position.
    e. Connect the audio input signal source to the amplifier input (CN1).
    f. Turn on the power supply.
3. 36V Operation Modifications (minimum resistance load is 3 Ω)
    a. Refer to MP7770 Data Sheet Table 2 for frequency optimization.
    b. Change R16 to 64.3k to set 30V VDD shut down voltage.
    c. Adjust the power supply to 36V (do not turn on).
    d. Do as step b~f specified in Section 2.
4. 12V Operation Modifications
    a. Refer to MP7770 Data Sheet Table 2 for frequency optimization.
    b. Change R16 to 16.9kΩ to set 9.5V VDD shutdown voltage.
    c. Adjust R15 to 27kΩ so that the EN voltage is high enough @ 12V VDD.
    d. Adjust the power supply to 12V (do not turn on).
    e. Do as step b~f specified in Section 2.
5. Music Turn-On Sequence
    Set the enable switch to the ENABLE position.
6. Music Turn-Off Sequence
    a. Set the enable switch to the DISABLE position.
    b. Turn off the power supply.

MPS Proprietary Information. Patent Protected. Unauthorized Photocopy and Duplication Prohibited.© 2013 MPS. All Rights Reserved.

INSTRUCTIONS FOR OTW/FAULT INDICATIONS (ERROR REPORTING):

PIN		Error Reporting Description		
FAULT	OTW	Over Temperature Warning	Over Temperature Protection	Over Current Protection
0	0	0	0	0
0	1	**1**	0	0
1	0	0	0	**1**
1	1	0	**1**	0

Note: For more details, please find the datasheet of MP7770.

NOTICE: The information in this document is subject to change without notice. Please contact MPS for current specifications. Users should warrant and guarantee that third party Intellectual Property rights are not infringed upon when integrating MPS products into any application. MPS will not assume any legal responsibility for any said applications.

MPS Proprietary Information. Patent Protected. Unauthorized Photocopy and Duplication Prohibited.
© 2013 MPS. All Rights Reserved.