CUI INC
a bel group

SERIES: PQC50-O | DESCRIPTION: DC-DC CONVERTER

FEATURES

- 50 W isolated output
- industry standard DOSA 1/16 brick
- 2:1 input range (36~75 Vdc)
- -40 ~ 85°C operating temperature
- over-current, input under-voltage, over-voltage and output short-circuit protection
- remote on/off control
- EN/BS EN 62368 certified

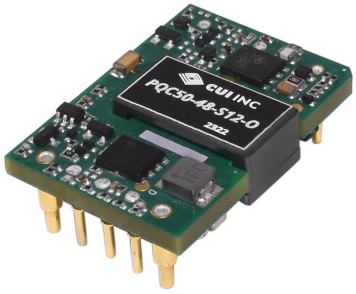

MODEL

	input voltage		output voltage	output current		output power	ripple and noise[1]	efficiency[2]
	typ (Vdc)	range (Vdc)	(Vdc)	min (mA)	max (mA)	max (W)	max (mVp-p)	typ (%)
PQC50-48-S5-O	48	36~75	5	0	10,000	50	200	88
PQC50-48-S12-O	48	36~75	12	0	4,170	50	200	90

Notes: 1. Ripple and noise are measured at 20 MHz BW, 5%~100% load by "parallel cable" method with 1 µF ceramic and 10 µF electrolytic capacitors on the output.
2. Efficiency is measured at nominal input voltage and rated output load.

PART NUMBER KEY

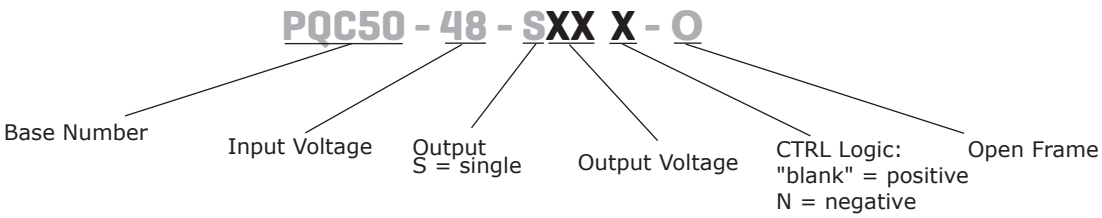

INPUT

parameter	conditions/description	min	typ	max	units
operating input voltage		36	48	80	Vdc
current (full load/no load)	at nominal input voltage		1,185/6	1,220/20	mA
reflected ripple current	at nominal input voltage		50		mA
start-up voltage				36	Vdc
under-voltage protection		26	29		Vdc
start-up time	at nominal input voltage & constant resistance load			100	ms
surge voltage	for maximum of 1 second	-0.7		100	Vdc
CTRL[3]	positive logic: module ON: CTRL pin open or pulled high (4.5~12Vdc)				
	positive logic: module OFF: CTRL pin pulled low to GND (0~1.2Vdc)				
	negative logic: module ON: CTRL pin pulled low to GND (0~1.2Vdc)				
	negative logic: module OFF: CTRL pin open or pulled high (4.5~12Vdc)				
standby current	CTRL pin pulled low		6	10	mA
filter	C filter				

Notes: 3. The CTRL pin voltage is referenced to input GND.

OUTPUT

parameter	conditions/description	min	typ	max	units
maximum capacitive load	5 Vdc output 12 Vdc output			7,200 2,000	µF µF
line regulation[4]	full load, input voltage from low to high		±0.2	±0.5	%
load regulation	5% to 100% load		±0.5	±1	%
voltage accuracy	5% to 100% load		±1	±3	%
switching frequency[5]	PWM mode		230		kHz
transient recovery time	25% load step change, nominal input		300	500	µs
transient response deviation	25% load step change, nominal input 5 Vdc output voltage 12 Vdc output voltage		 ±5 ±3	 ±10 ±5	 % %
temperature coeffecient	full load			±0.03	%/°C
trim		90		110	%
remote sense compensation				105	%

Notes: 4. Line regulation for 0%~100% load is ±3%.
5. Switching frequency is measured at full load. The module reduces the switching frequency for light load (below 50%) efficiency improvement.

PROTECTIONS

parameter	conditions/description	min	typ	max	units
over voltage protection		110	130	160	%
over current protection		110	150	190	%
short circuit protection	auto recovery, continuous				

SAFETY AND COMPLIANCE

parameter	conditions/description	min	typ	max	units
isolation voltage	input to output for 1 minute at 1 mA max.	1,500			Vdc
isolation resistance	input to output at 500 Vdc	1,000			MΩ
isolation capacitance	input to output at 100kHz/0.1V		1,000		pF
vibration	10-150Hz, 5G, 0.75mm. along X, Y and Z				

SAFETY AND COMPLIANCE (CONTINUED)

parameter	conditions/description	min	typ	max	units
safety approvals	certified 62368: EN, BS EN				
conducted emissions	CISPR32/EN55032 CLASS A (see Fig. 2 for recommended circuit) CISPR32/EN55032 CLASS B (see Fig. 3-1 for recommended circuit)				
radiated emissions	CISPR32/EN55032 CLASS A (see Fig. 2 for recommended circuit) CISPR32/EN55032 CLASS B (see Fig. 3-1 for recommended circuit)				
ESD	IEC/EN61000-4-2 Contact ±4KV, perf. Criteria B				
radiated immunity	IEC/EN61000-4-3 10V/m, perf. Criteria A				
EFT/burst	IEC/EN61000-4-4 ±2KV (see Fig.2-1 for recommended circuit), perf. Criteria B				
surge	IEC/EN61000-4-5 line to line ±2KV (see Fig.2-2 for recommended circuit), perf. Criteria B				
conducted immunity	IEC/EN61000-4-6 3 Vrms, perf. Criteria A				
MTBF	as per MIL-HDBK-217F at 25°C	1,000,000			hours
RoHS	yes				

ENVIRONMENTAL

parameter	conditions/description	min	typ	max	units
operating temperature	see derating curve	-40		85	°C
storage temperature		-55		125	°C
storage humidity	non-condensing	5		95	%

MECHANICAL

parameter	conditions/description	min	typ	max	units
dimensions	33.02 x 22.86 x 9.70 [1.300 x 0.900 x 0.382 inch]				mm
weight			12		g
cooling method	natural convection or forced air				

MECHANICAL DRAWING

units: mm[inch]
tolerance: ±0.50[±0.020]
pin section tolerance: ±0.10[±0.004]
pin 1,2,3,5,6,7: Ø1.0mm
pin 4,8: Ø1.5mm

Note: The layout of the device is for reference only, please refer to the actual product.

PIN CONNECTIONS	
PIN	Function
1	Vin
2	CTRL
3	GND
4	0V
5	Sense-
6	Trim
7	Sense+
8	+Vo

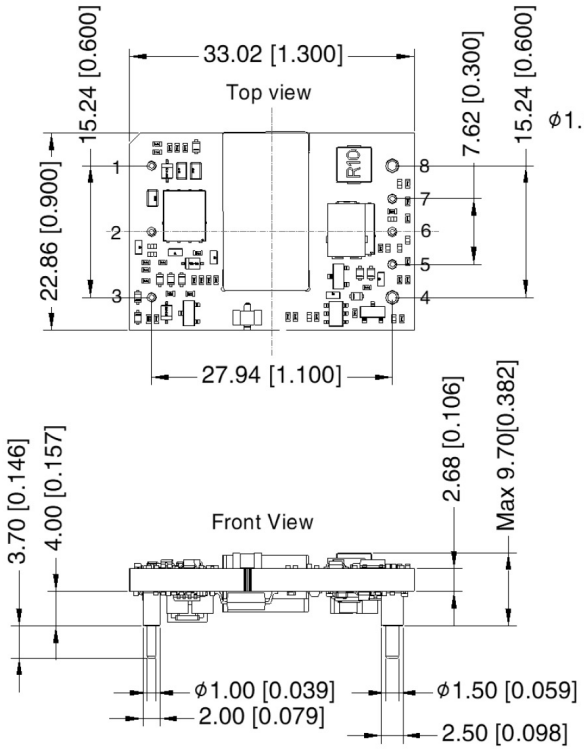

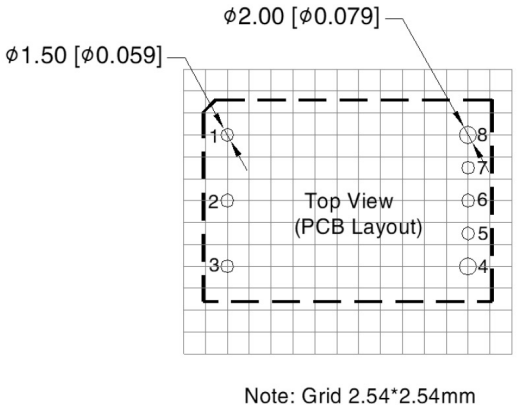

Note: Grid 2.54*2.54mm

DERATING CURVE

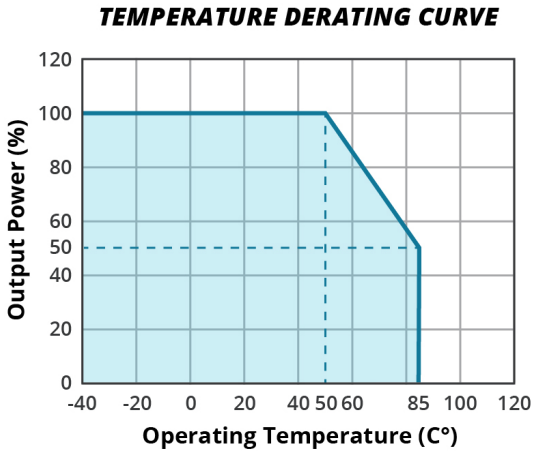

EFFICIENCY CURVES

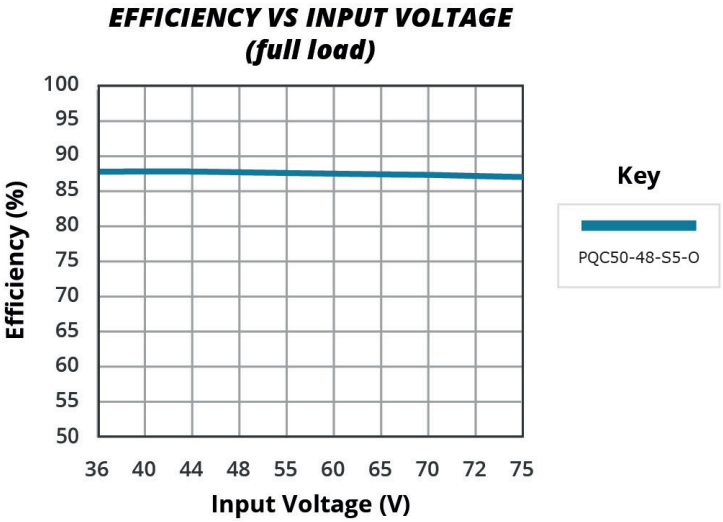

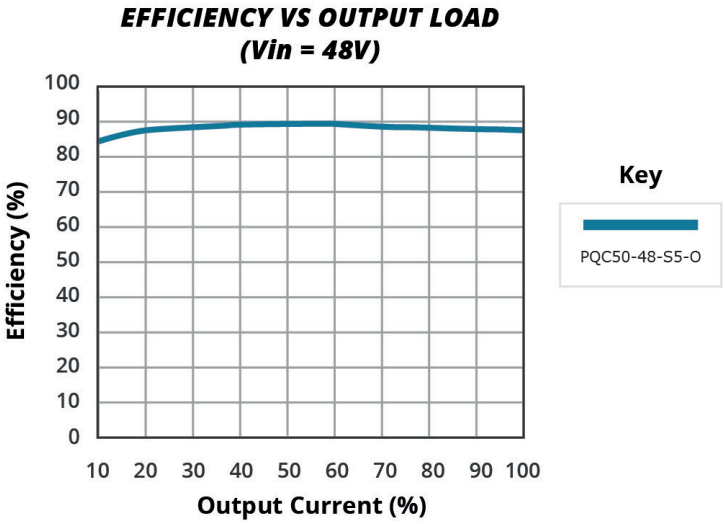

APPLICATION NOTES

All DC-DC converters of this series are tested before delivery using the recommended circuit shown in Fig. 1.
Input and/or output ripple can be further reduced by appropriately increasing the input & output capacitor values Cin and Cout and/or by selecting capacitors with a low ESR (equivalent series resistance). Also make sure that the capacitance is not exceeding the specified max. capacitive load value of the product.

Figure 1

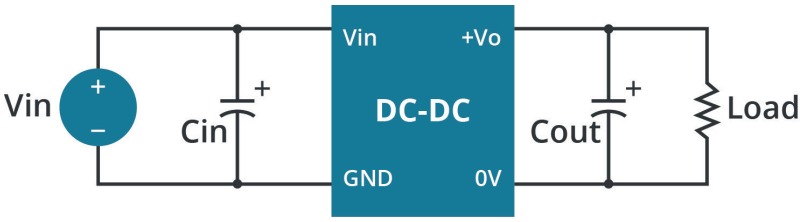

Table 1

Vin (Vdc)	Cin (µF/V)	Cout (µF/V)
48	100µF/100V	330µF/63V

EMC CLASS A RECOMMENDED CIRCUIT

Figure 2

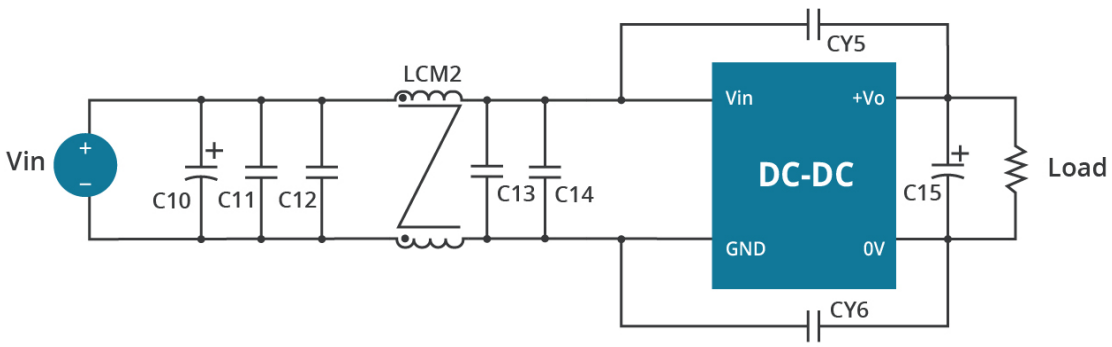

Notes: For EMC tests we use Part 2 in Fig. 2 for immunity and part 1 for emissions test. Selecting based on needs.

Table 2

Vout	5V, 12V
C10	680µF/100V
C11, C12, C13, C14	4.7µF/100V
C15	refer to the Cout in Fig. 1
LCM2	2.2 mH
CY5, CY6	2.2nF/400Vac

EMC CLASS B RECOMMENDED CIRCUIT

Figure 3

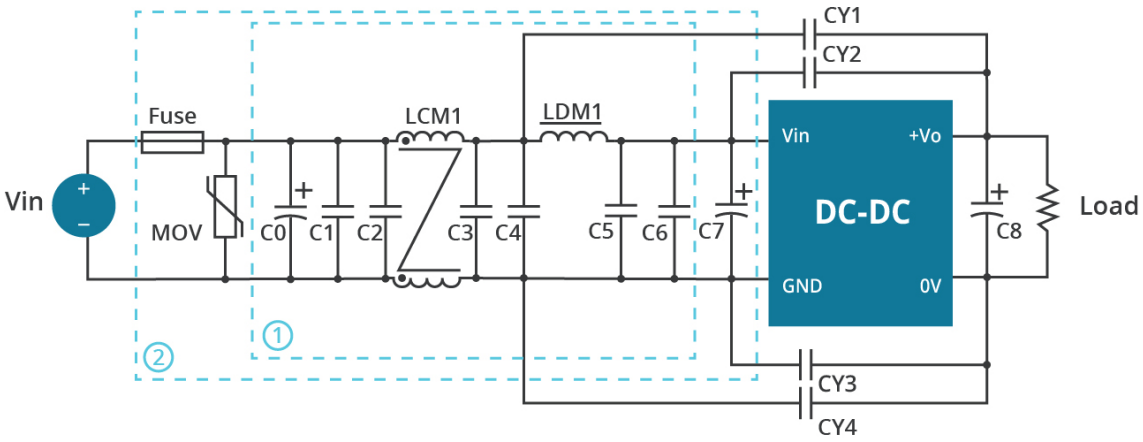

Table 3

Recommended external circuit components	
Vout	28V
FUSE	according to the customer's actual input current selection
MOV	14D101K
C0	680μF/100V
C1/C2/C3/C4/C5/C6	4.7μF/100V
C7	330μF/100V
C8	refer to the Cout in Fig. 1
LCM1	2.2mH
LDM1	22μH
CY1/CY2/CY3/CY4	2.2nF/400Vac

REMOTE SENSE APPLICATION

Figure 4

REMOTE SENSE CONNECTION IF NOT USED

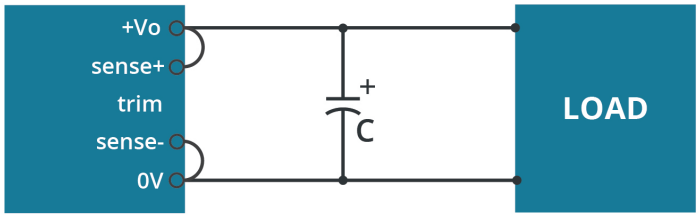

Note: 1. Lines must be kept as short as possible.
2. If the sense function is not used for remote regulation the user must connect the +Sense to + Vo and -Sense to 0V at the DC-DC converter pins and will compensate for voltage drop across pins only.
3. The connections between Sense lines and their respective power lines must be kept as short as possible, otherwise they may be picking up noise, interference and/or causing unstable operation of the power module.

Figure 5

REMOTE SENSE CONNECTION USED FOR COMPENSATION

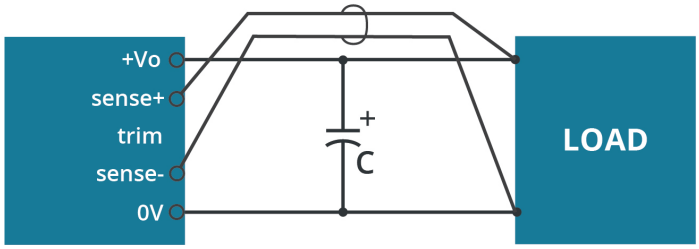

Note: 1. In cables and discrete wiring applications, twisted pair or other techniques should be implemented.
2. Using remote sense with long wires may cause unstable output, please contact technical support if long wires must be used.
3. PCB-tracks or cables/wires for Remote Sense must be kept as short as possible. Twisted pair or shielded wires are suggested for remote compensation and must be kept as short as possible.
4. We recommend using adequate cross section for PCB-track layout and/or cables to connect the power supply module to the load in order to keep the voltage drop below 0.3V and to make sure the power supply's output voltage remains within the specified range.
5. Note that large wire impedance may cause oscillation of the output voltage and/or increased ripple. Consult technical support or factory for further advice of sense operation.

APPLICATION NOTES

Figure 6

Trim up

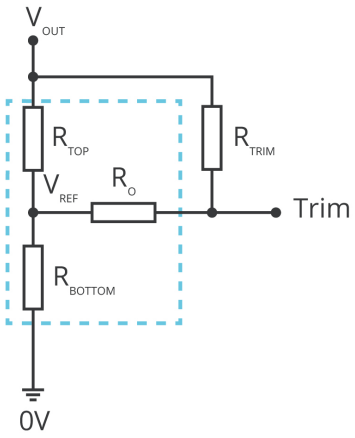

Trim down

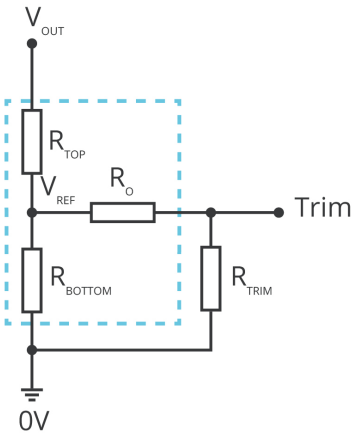

$$R_{TRIM} = \left(\frac{5.11 \cdot V_{NOM}(100+\Delta\%)}{1.225\Delta\%} - \frac{511}{\Delta\%} - 10.22 \right) (K\Omega)$$

Formula for Trim up

$$R_{TRIM} = \left(\frac{511}{\Delta\%} \right) - 10.22\ (K\Omega)$$

Formula for Trim down

Note: R_{TRIM}: Trim resistance

$\Delta\%$: $\Delta\% = \left| \frac{V_{NOM} - V_{OUT}}{V_{NOM}} \right| \times 100$

V_{NOM}: Nominal output voltage
V_{OUT}: Target output voltage

THERMAL TEST POINT

The thermal element is installed on the top surface of the product and dissipates heat to the surrounding environment through conduction, convection and radiation. Sufficient heat dissipation conditions should be provided to ensure the reliable operation of the product. By measuring the temperature of the thermal test point in Fig. 7, it can be verified whether the heat dissipation conditions are met.

Figure 7

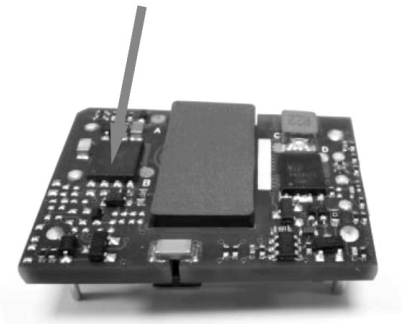

Note: 1. Maximum capacitive load is tested at input voltage range and full load.
2. All specifications are measured at Ta=25°C, humidity<75%, nominal input voltage and rated output load unless otherwise specified.

REVISION HISTORY

rev.	description	date
1.0	initial release	07/10/2023
1.01	product image updated	07/26/2023

The revision history provided is for informational purposes only and is believed to be accurate.

CUI INC
a bel group

Headquarters
20050 SW 112th Ave.
Tualatin, OR 97062
800.275.4899

Fax 503.612.2383
cui.com
techsupport@cui.com

CUI offers a two (2) year limited warranty. Complete warranty information is listed on our website.

CUI reserves the right to make changes to the product at any time without notice. Information provided by CUI is believed to be accurate and reliable. However, no responsibility is assumed by CUI for its use, nor for any infringements of patents or other rights of third parties which may result from its use.

CUI products are not authorized or warranted for use as critical components in equipment that requires an extremely high level of reliability. A critical component is any component of a life support device or system whose failure to perform can be reasonably expected to cause the failure of the life support device or system, or to affect its safety or effectiveness.