Data sheet



# A3M60B-BFPB013x13

## A3M60

**ABSOLUTE ENCODERS**

SICK
Sensor Intelligence.



Illustration may differ

## Ordering information

| Type | part no. |
|---|---|
| A3M60B-BFPB013x13 | 1053328 |

Other models and accessories ➜ www.sick.com/A3M60

## Detailed technical data

### Safety-related parameters

| | |
|---|---|
| **$MTTF_D$ (mean time to dangerous failure)** | 60 years (EN ISO 13849-1) [1] |

[1] This product is a standard product and does not constitute a safety component as defined in the Machinery Directive. Calculation based on nominal load of components, average ambient temperature 40 °C, frequency of use 8760 h/a. All electronic failures are considered hazardous. For more information, see document no. 8015532.

### Performance

| | |
|---|---|
| **Number of steps per revolution (max. resolution)** | 8,192 (13 bit) |
| **Number of revolutions** | 8,192 (13 bit) |
| **Max. resolution (number of steps per revolution x number of revolutions)** | 13 bit x 13 bit (8,192 x 8,192) |
| **Error limits G** | 0.5 ° (at room temperature) [1] |
| **Repeatability standard deviation $\sigma_r$** | 0.25 ° (at room temperature) [2] |

[1] In accordance with DIN ISO 1319-1, position of the upper and lower error limit depends on the installation situation, specified value refers to a symmetrical position, i.e. deviation in upper and lower direction is the same.
[2] In accordance with DIN ISO 55350-13; 68.3% of the measured values are inside the specified area.

### Interfaces

| | |
|---|---|
| **Communication interface** | PROFIBUS DP |
| **Communication Interface detail** | DPV0 |
| **Data transmission rate (baud rate)** | ≤ 12 MBaud |
| **Initialization time** | Approx. 1 s |
| **Parameterising data** | Number of steps per revolution<br>Number of revolutions<br>PRESET<br>Counting direction |
| **Bus termination** | DIP switch |

### Electronics

| | |
|---|---|
| **Connection type** | Male connector, 2x, M12, 5-pin, axial<br>Female connector, 1x, M12, 5-pin, axial |
| **Supply voltage** | 10 ... 32 V |

| | |
|---|---|
| **Power consumption** | ≤ 1.5 W |
| **Reverse polarity protection** | ✓ |

## Mechanics

| | |
|---|---|
| **Mechanical design** | Blind hollow shaft |
| **Shaft diameter** | 1/2″ |
| **Characteristics of the shaft** | Front clamp |
| **Weight** | 0.28 kg |
| **Shaft material** | Stainless steel |
| **Flange material** | Aluminum |
| **Housing material** | Aluminum |
| **Start up torque** | 1 Ncm (+20 °C) |
| **Operating torque** | 0.8 Ncm (+20 °C) |
| **Permissible movement static** | ± 0.3 mm (radial)<br>± 0.5 mm (axial) |
| **Permissible movement dynamic** | ± 0.1 mm (radial)<br>± 0.2 mm (axial) |
| **Operating speed** | ≤ 9,000 $min^{-1}$ [1] |
| **Bearing lifetime** | 3.0 x 10^9 revolutions |
| **Angular acceleration** | ≤ 500,000 $rad/s^2$ |

[1] Self warming 45 K at maximum operating speed.

## Ambient data

| | |
|---|---|
| **EMC** | According to EN 61000-6-2 and EN 61000-6-3 |
| **Enclosure rating** | IP65, shaft side (IEC 60529)<br>IP67, housing side (IEC 60529) [1] |
| **Permissible relative humidity** | 95 % (Condensation not permitted) |
| **Operating temperature range** | –10 °C ... +70 °C |
| **Storage temperature range** | –40 °C ... +100 °C |
| **Resistance to shocks** | 80 g, 6 ms (EN 60068-2-27) |
| **Resistance to vibration** | 30 g, 10 Hz ... 2,000 Hz (EN 60068-2-6) |

[1] With mating connector fitted.

## Classifications

| | |
|---|---|
| **ECLASS 5.0** | 27270502 |
| **ECLASS 5.1.4** | 27270502 |
| **ECLASS 6.0** | 27270590 |
| **ECLASS 6.2** | 27270590 |
| **ECLASS 7.0** | 27270502 |
| **ECLASS 8.0** | 27270502 |
| **ECLASS 8.1** | 27270502 |
| **ECLASS 9.0** | 27270502 |
| **ECLASS 10.0** | 27270502 |
| **ECLASS 11.0** | 27270502 |

| | |
|---|---|
| **ECLASS 12.0** | 27270502 |
| **ETIM 5.0** | EC001486 |
| **ETIM 6.0** | EC001486 |
| **ETIM 7.0** | EC001486 |
| **ETIM 8.0** | EC001486 |
| **UNSPSC 16.0901** | 41112113 |

## Certificates

| | |
|---|---|
| **EU declaration of conformity** | ✓ |
| **UK declaration of conformity** | ✓ |
| **ACMA declaration of conformity** | ✓ |
| **Moroccan declaration of conformity** | ✓ |
| **China-RoHS** | ✓ |
| **cULus certificate** | ✓ |
| **Information according to Art. 3 of Data Act (Regulation EU 2023/2854)** | ✓ |

## Dimensional drawing

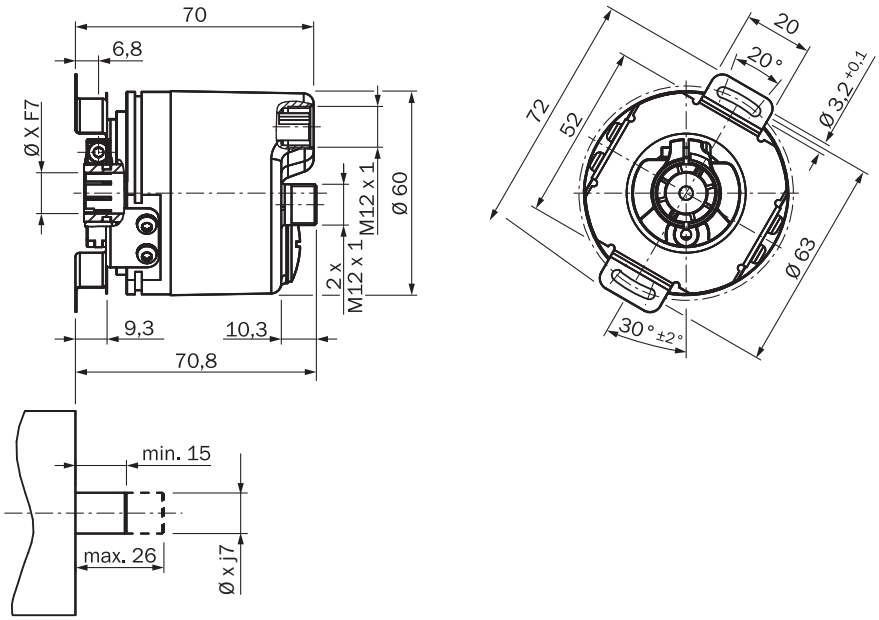


Dimensions in mm (inch)

## PIN assignment

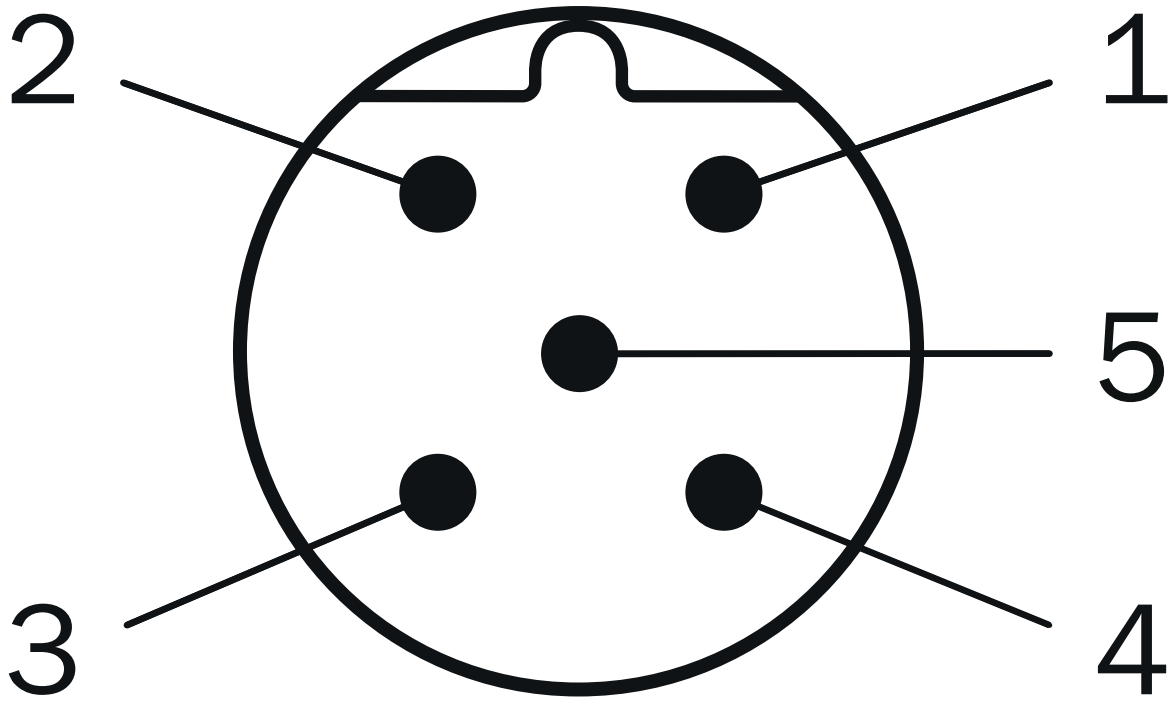


| PIN | PROFIBUS IN | PROFIBUS OUT | Supply voltage |
|---|---|---|---|
| 1 | Not assigned | +5 V2P5[1)] | Operating voltage |
| 2 | PROFIBUSDataA | PROFIBUSDataA | Not assigned |
| 3 | Not assigned | 0 V (2M) [1)] | Ground (0 V) |
| 4 | PROFIBUSDataB | PROFIBUSDataB | Not assigned |
| 5 | Screen | Screen | Not assigned |
| [1)]External connection to the bus | – | – | – |

## PIN assignment

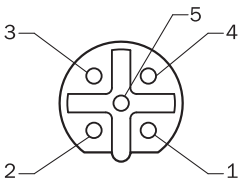


| PIN | PROFIBUS IN | PROFIBUS OUT | Supply voltage |
|---|---|---|---|
| 1 | Not assigned | +5 V2P5[1)] | Operating voltage |
| 2 | PROFIBUSDataA | PROFIBUSDataA | Not assigned |
| 3 | Not assigned | 0 V (2M) [1)] | Ground (0 V) |

| PIN | PROFIBUS IN | PROFIBUS OUT | Supply voltage |
|---|---|---|---|
| 4 | PROFIBUSDataB | PROFIBUSDataB | Not assigned |
| 5 | Screen | Screen | Not assigned |
| [1]External connection to the bus | – | – | – |

## PIN assignment

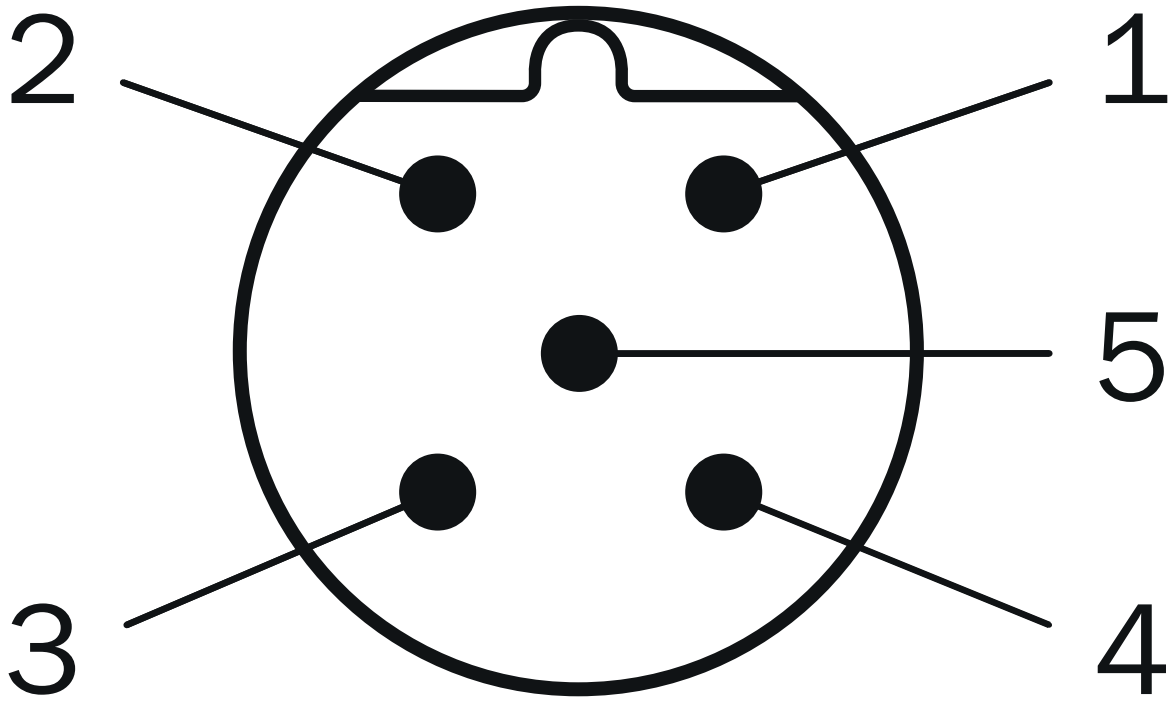


| PIN | PROFIBUS IN | PROFIBUS OUT | Supply voltage |
|---|---|---|---|
| 1 | Not assigned | +5 V2P5[1] | Operating voltage |
| 2 | PROFIBUSDataA | PROFIBUSDataA | Not assigned |
| 3 | Not assigned | 0 V (2M) [1] | Ground (0 V) |
| 4 | PROFIBUSDataB | PROFIBUSDataB | Not assigned |
| 5 | Screen | Screen | Not assigned |
| [1]External connection to the bus | – | – | – |

## Recommended accessories

Other models and accessories ➜ www.sick.com/A3M60

| | Brief description | Type | part no. |
|---|---|---|---|
| connectors and cables | | | |
|  | • **Connection type head A:** Female connector, M12, 5-pin, straight, B-coded<br>• **Connection type head B:** Male connector, M12, 5-pin, straight, B-coded<br>• **Signal type:** Fieldbus, PROFIBUS DP<br>• **Cable:** 10 m, 2-wire, PUR, halogen-free<br>• **Description:** Fieldbus, twisted pair, shieldedPROFIBUS DP<br>• **Note:** Wire shield Al-Pt film, overall shield C-screen tin-plated<br>• **Application:** Zones with oils and lubricants, Drag chain operation | DSL-1205-G10MQ | 6032640 |
|  | • **Connection type head A:** Flying leads<br>• **Connection type head B:** Flying leads<br>• **Signal type:** PROFIBUS DP<br>• **Items supplied:** By the meter<br>• **Cable:** 2-wire, PUR<br>• **Description:** PROFIBUS DP, shielded | LTG-2102-MW | 6021355 |
|  | • **Connection type head A:** Male connector, M12, 4-pin, straight, B-coded<br>• **Signal type:** PROFIBUS DP<br>• **Description:** PROFIBUS DP, terminal resistor | STE-END-Q | 6021156 |
|  | • **Connection type head A:** Male connector, M12, 5-pin, straight, B-coded<br>• **Signal type:** PROFIBUS DP<br>• **Description:** PROFIBUS DP, shielded<br>• **Connection systems:** Screw-type terminals<br>• **Permitted cross-section:** ≤ 0.75 mm² | STE-1205-GQ | 6021354 |
|  | • **Connection type head A:** Female connector, M12, 5-pin, straight, B-coded<br>• **Signal type:** PROFIBUS DP<br>• **Description:** PROFIBUS DP, shielded<br>• **Connection systems:** Screw-type terminals<br>• **Permitted cross-section:** ≤ 0.75 mm² | DOS-1205-GQ | 6021353 |
|  | • **Connection type head A:** Female connector, M12, 5-pin, angled, B-coded<br>• **Signal type:** PROFIBUS DP<br>• **Description:** PROFIBUS DP, shielded<br>• **Connection systems:** Spring-cage connection<br>• **Permitted cross-section:** 0.14 mm² ... 0.5 mm² | DOS-1205-WQ | 6041429 |
|  | • **Connection type head A:** Male connector, M12, 5-pin, angled, B-coded<br>• **Signal type:** PROFIBUS DP<br>• **Description:** PROFIBUS DP, shielded<br>• **Connection systems:** Spring-cage connection<br>• **Permitted cross-section:** 0.14 mm² ... 0.5 mm² | STE-1205-WQ | 6041428 |
|  | • **Connection type head A:** Female connector, M12, 5-pin, angled, A-coded<br>• **Connection type head B:** Flying leads<br>• **Signal type:** Sensor/actuator cable<br>• **Cable:** 5 m, 2-wire, PUR, halogen-free<br>• **Description:** Sensor/actuator cable, unshielded<br>• **Note:** Voltage supply<br>• **Application:** Zones with oils and lubricants | DOL-1202-W05MC | 6042067 |
|  | • **Connection type head A:** Female connector, M12, 5-pin, angled, A-coded<br>• **Connection type head B:** Flying leads<br>• **Signal type:** Sensor/actuator cable<br>• **Cable:** 10 m, 2-wire, PUR, halogen-free<br>• **Description:** Sensor/actuator cable, unshielded<br>• **Note:** Voltage supply<br>• **Application:** Zones with oils and lubricants | DOL-1202-W10MC | 6042068 |
| | • **Items supplied:** 1 x female connector M12, 4-pin, angled, 1 x female connector M12, 5-pin, angled, male connector M12, 5-pin, angled, cable?<br>• **Description:** Unshielded<br>• **Note:** Set of connectors | DOS-3XM12-W | 2058177 |
|  | • **Connection type head A:** Female connector, M12, 5-pin, straight, A-coded<br>• **Connection type head B:** Flying leads<br>• **Signal type:** Sensor/actuator cable<br>• **Cable:** 5 m, 5-wire, PUR, halogen-free<br>• **Description:** Sensor/actuator cable, shielded | YF2A25-050UB6XLEAX | 2095733 |

| | Brief description | Type | part no. |
|---|---|---|---|
| | • **Application:** Uncontaminated zones, Zones with oils and lubricants, Robot, Drag chain operation | | |
|  | • **Connection type head A:** Female connector, M12, 5-pin, straight, A-coded<br>• **Connection type head B:** Flying leads<br>• **Signal type:** Sensor/actuator cable<br>• **Cable:** 10 m, 5-wire, PUR, halogen-free<br>• **Description:** Sensor/actuator cable, shielded<br>• **Application:** Uncontaminated zones, Zones with oils and lubricants, Robot, Drag chain operation | YF2A25-100UB6XLEAX | 2095734 |
|  | • **Connection type head A:** Female connector, M12, 5-pin, straight, A-coded<br>• **Connection type head B:** Flying leads<br>• **Signal type:** Sensor/actuator cable<br>• **Cable:** 20 m, 5-wire, PUR, halogen-free<br>• **Description:** Sensor/actuator cable, shielded<br>• **Application:** Uncontaminated zones, Zones with oils and lubricants, Robot, Drag chain operation | YF2A25-200UB6XLEAX | 2095738 |
|  | • **Connection type head A:** Female connector, M12, 5-pin, angled, A-coded<br>• **Description:** Unshielded<br>• **Connection systems:** Screw-type terminals<br>• **Permitted cross-section:** ≤ 0.75 mm² | DOS-1205-W | 6009720 |
|  | • **Connection type head A:** Female connector, M12, 5-pin, straight, A-coded<br>• **Description:** Unshielded<br>• **Connection systems:** Screw-type terminals<br>• **Permitted cross-section:** ≤ 0.75 mm² | DOS-1205-G | 6009719 |
|  | • **Connection type head A:** Male connector, M12, 2-pin, straight, B-coded<br>• **Connection type head B:** Flying leads<br>• **Signal type:** Fieldbus, PROFIBUS DP<br>• **Cable:** 15 m, 2-wire, PUR, halogen-free<br>• **Description:** Fieldbus, shieldedPROFIBUS DP<br>• **Application:** Drag chain operation, Zones with oils and lubricants | YM2B22-150P-B1XLEAX | 2106276 |
|  | • **Connection type head A:** Male connector, M12, 2-pin, angled, B-coded<br>• **Connection type head B:** Flying leads<br>• **Signal type:** Fieldbus, PROFIBUS DP<br>• **Cable:** 5 m, 2-wire, PUR, halogen-free<br>• **Description:** Fieldbus, shieldedPROFIBUS DP<br>• **Application:** Drag chain operation, Zones with oils and lubricants | YN2B22-050P-B1XLEAX | 2106277 |
| | • **Connection type head A:** Female connector, M12, 2-pin, angled, B-coded<br>• **Connection type head B:** Flying leads<br>• **Signal type:** Fieldbus, PROFIBUS DP<br>• **Cable:** 5 m, 2-wire, PUR, halogen-free<br>• **Description:** Fieldbus, shieldedPROFIBUS DP<br>• **Application:** Drag chain operation, Zones with oils and lubricants | YG2B22-050P-B1XLEAX | 2106274 |
|  | • **Connection type head A:** Female connector, M12, 2-pin, angled, B-coded<br>• **Connection type head B:** Flying leads<br>• **Signal type:** Fieldbus, PROFIBUS DP<br>• **Cable:** 10 m, 2-wire, PUR, halogen-free<br>• **Description:** Fieldbus, shieldedPROFIBUS DP<br>• **Application:** Drag chain operation, Zones with oils and lubricants | YG2B22-100P-B1XLEAX | 2106275 |
|  | • **Connection type head A:** Male connector, M12, 2-pin, angled, B-coded<br>• **Connection type head B:** Flying leads<br>• **Signal type:** Fieldbus, PROFIBUS DP<br>• **Cable:** 10 m, 2-wire, PUR, halogen-free<br>• **Description:** Fieldbus, shieldedPROFIBUS DP<br>• **Application:** Drag chain operation, Zones with oils and lubricants | YN2B22-100P-B1XLEAX | 2106278 |
|  | • **Connection type head A:** Male connector, M12, 2-pin, straight, B-coded<br>• **Connection type head B:** Flying leads<br>• **Signal type:** Fieldbus, PROFIBUS DP<br>• **Cable:** 5 m, 2-wire, PUR, halogen-free<br>• **Description:** Fieldbus, shieldedPROFIBUS DP<br>• **Application:** Drag chain operation, Zones with oils and lubricants | YM2B22-050P-B1XLEAX | 2106270 |
|  | • **Connection type head A:** Male connector, M12, 2-pin, straight, B-coded<br>• **Connection type head B:** Flying leads<br>• **Signal type:** Fieldbus, PROFIBUS DP<br>• **Cable:** 10 m, 2-wire, PUR, halogen-free<br>• **Description:** Fieldbus, shieldedPROFIBUS DP<br>• **Application:** Drag chain operation, Zones with oils and lubricants | YM2B22-100P-B1XLEAX | 2106271 |
|  | • **Connection type head A:** Female connector, M12, 2-pin, straight, B-coded<br>• **Connection type head B:** Flying leads<br>• **Signal type:** Fieldbus, PROFIBUS DP<br>• **Cable:** 10 m, 2-wire, PUR, halogen-free<br>• **Description:** Fieldbus, shieldedPROFIBUS DP | YF2B22-100P-B1XLEAX | 2106269 |

| | Brief description | Type | part no. |
|---|---|---|---|
| | • **Application:** Drag chain operation, Zones with oils and lubricants | | |
| | • **Connection type head A:** Female connector, M12, 2-pin, straight, B-coded<br>• **Connection type head B:** Flying leads<br>• **Signal type:** Fieldbus, PROFIBUS DP<br>• **Cable:** 15 m, 2-wire, PUR, halogen-free<br>• **Description:** Fieldbus, shieldedPROFIBUS DP<br>• **Application:** Drag chain operation, Zones with oils and lubricants | YF2B22-150P-B1XLEAX | 2106272 |
| | • **Connection type head A:** Female connector, M12, 2-pin, straight, B-coded<br>• **Connection type head B:** Flying leads<br>• **Signal type:** Fieldbus, PROFIBUS DP<br>• **Cable:** 20 m, 2-wire, PUR, halogen-free<br>• **Description:** Fieldbus, shieldedPROFIBUS DP<br>• **Application:** Drag chain operation, Zones with oils and lubricants | YF2B22-200P-B1XLEAX | 2106273 |
|  | • **Connection type head A:** Female connector, M12, 2-pin, straight, B-coded<br>• **Connection type head B:** Flying leads<br>• **Signal type:** Fieldbus, PROFIBUS DP<br>• **Cable:** 5 m, 2-wire, PUR, halogen-free<br>• **Description:** Fieldbus, shieldedPROFIBUS DP<br>• **Application:** Drag chain operation, Zones with oils and lubricants | YF2B22-050P-B1XLEAX | 2121936 |
|  | • **Connection type head A:** Female connector, M12, 5-pin, straight, A-coded<br>• **Connection type head B:** Flying leads<br>• **Signal type:** Sensor/actuator cable<br>• **Cable:** 2 m, 5-wire, PUR, halogen-free<br>• **Description:** Sensor/actuator cable, shielded<br>• **Application:** Uncontaminated zones, Zones with oils and lubricants, Robot, Drag chain operation | YF2A25-020UB6XLEAX | 2145583 |
|  | • **Connection type head A:** Female connector, M12, 5-pin, straight, A-coded<br>• **Connection type head B:** Flying leads<br>• **Signal type:** Sensor/actuator cable<br>• **Cable:** 1 m, 5-wire, PUR, halogen-free<br>• **Description:** Sensor/actuator cable, shielded<br>• **Application:** Uncontaminated zones, Zones with oils and lubricants, Robot, Drag chain operation | YF2A25-010UB6XLEAX | 2145582 |
|  | • **Connection type head A:** Female connector, M12, 5-pin, straight, A-coded<br>• **Connection type head B:** Flying leads<br>• **Signal type:** Sensor/actuator cable<br>• **Cable:** 0.6 m, 5-wire, PUR, halogen-free<br>• **Description:** Sensor/actuator cable, shielded<br>• **Application:** Uncontaminated zones, Zones with oils and lubricants, Robot, Drag chain operation | YF2A25-C60UB6XLEAX | 2145581 |

# SICK AT A GLANCE

SICK is one of the leading manufacturers of intelligent sensors and sensor solutions for industrial applications. A unique range of products and services creates the perfect basis for controlling processes securely and efficiently, protecting individuals from accidents and preventing damage to the environment.

We have extensive experience in a wide range of industries and understand their processes and requirements. With intelligent sensors, we can deliver exactly what our customers need. In application centers in Europe, Asia and North America, system solutions are tested and optimized in accordance with customer specifications. All this makes us a reliable supplier and development partner.

Comprehensive services complete our offering: SICK LifeTime Services provide support throughout the machine life cycle and ensure safety and productivity.

**For us, that is “Sensor Intelligence.”**

# WORLDWIDE PRESENCE:

Contacts and other locations –www.sick.com