RoHS compliant
by exemption

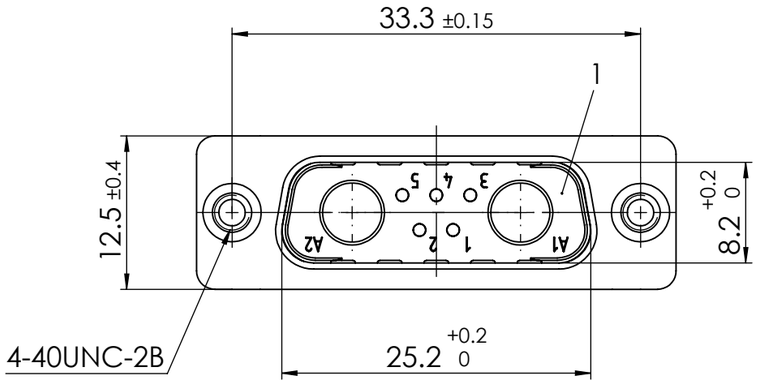

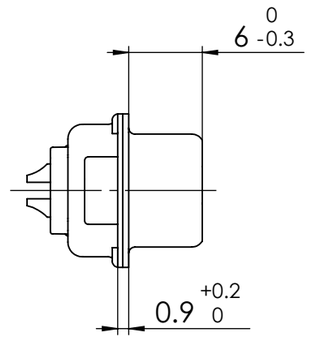

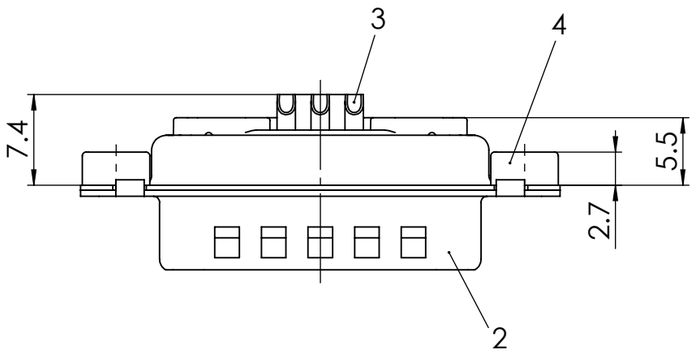

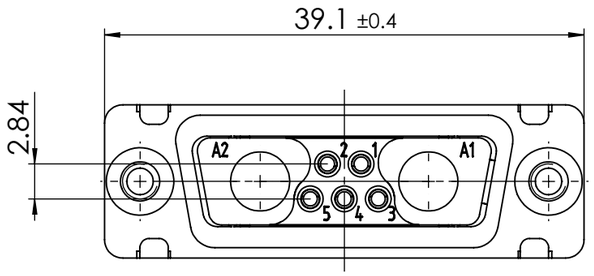

No.	St.	Part	Type Description/Material	Surface plating/Colour/Class
4	2	Clinch nut	FT 4-40 / Steel	tin plated
3	5	Signal contact	P0 / Brass	0.8µm Au / AWG 20
2	1	Shell	Steel	tin plated
1	1	Insulator	PBT (-55°C to +130°C) acc. UL94V-0	green

FUNCTIONAL SYMBOLS
= 0
= 0
= 0

THIS DRAWING CONTAINS INFORMATION THAT IS PROPRIETARY TO MOLEX ELECTRONIC TECHNOLOGIES, LLC AND SHOULD NOT BE USED WITHOUT WRITTEN PERMISSION

DIMENSION UNITS: mm
SCALE: 2:1
MEASUREMENTS WITHOUT TOLERANCE ACC. TO: ISO 2768-m

molex

FCT D-Sub Mixed-Layout Connector

CURRENT REVISION
DRWN: DRAWN BY msteinbrueck 11-09-2023
APPR: APPR BY mteubel 18-09-2023

REV.	CH.-NO.
2	24410
1	

INITIAL REVISION
DRWN: DRAWN BY sschref 09-03-2005
APPR: APPR BY aschiekofer 09-03-2005

PRODUCT CUSTOMER DRAWING

MATERIAL NUMBER	REVISION
1731070410	2

REPLACEMENT FOR:	FRIST ANGLE PROJECTION	DRAWING	DOCUMENT NUMBER	CUSTOMER	SHEET NUMBER
1731070410_Rev. A1		A3-SIZE	FMT7W2P-K120	GENERAL MARKET	1 OF 1

COMMENT:
ALL RIGHTS ARE RESERVED BY US FOR THIS DRAWING, WITHOUT OUR PRIOR CONSENT,
IT MAY NEITHER BE DUBLICATED NOR MADE AVAILABLE TO A THIRD PARTY,
AND IT ALSO MAY NOT BE IMPROPERLY USED BY TE RECEIVER, OR A THIRD PARTY.