Data sheet | Item number: 870-523/281-593

Component terminal block; double-deck; with suppressor diode; 24 VAC; for DIN-rail 35 x 15 and 35 x 7.5; 2.5 mm²; CAGE CLAMP®; 2,50 mm²; gray

www.wago.com/870-523/281-593

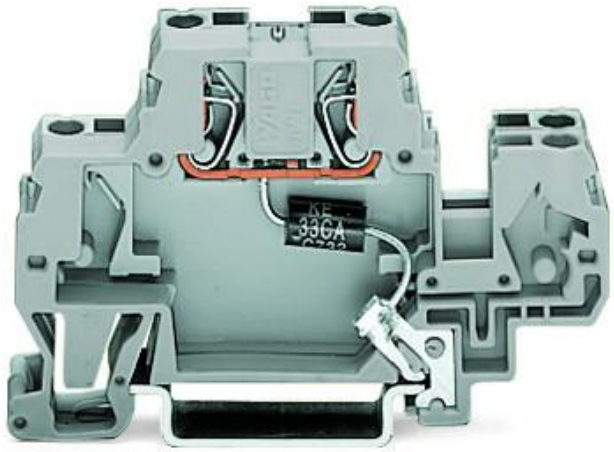

Picture differs from the item.

Color:

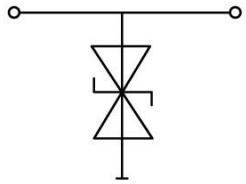

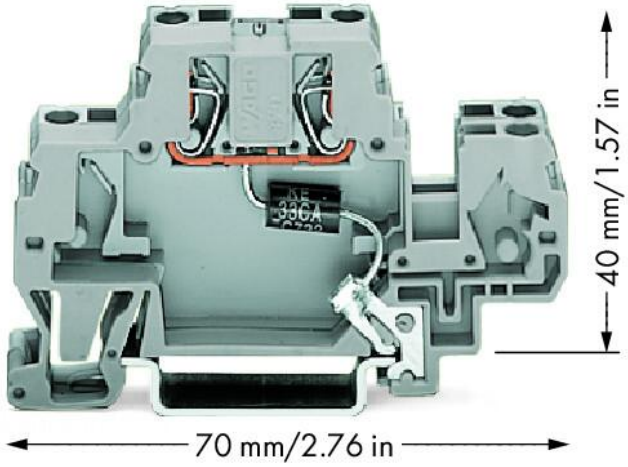

Data

Electrical data

Nominal operating voltage	AC 24 V
Highest continuous voltage	AC 26 V
Rated continuous current	20 A
Nominal discharge current (8/20 µs) (line)	143 A
Protection level (8/20 µs)	≤ AC 70 V
Capacitance	≤ 2.4 nF

Subject to changes. Please also observe the further product documentation!

WAGO GmbH & Co. KG
Hansastr. 27
32423 Minden
Phone: +49571 887-0 | Fax: +49571 887-169
Email: info.de@wago.com | Web: www.wago.com

Do you have any questions about our products?
We are always happy to take your call at +49 (571) 887-44222.

Connection data

Connections (number)	2
Connection technology	CAGE CLAMP®
Solid conductor	0.08 … 2.5 mm² / 28 … 14 AWG
Fine-stranded conductor	0.08 … 4 mm² / 28 … 12 AWG
Fine-stranded conductor; with insulated ferrule	0.08 … 1.5 mm² / 28 … 14 AWG
Strip length	6 … 7 mm / 0.24 … 0.28 inches

Physical data

Width	10 mm / 0.394 inches
Height from upper-edge of DIN-rail	40 mm / 1.575 inches
Depth	70 mm / 2.756 inches

Mechanical data

Mounting type	DIN-35 rail

Material data

Color	gray
Insulation material	Polyamide (PA66)
Material group	I
Flammability class per UL94	V0
Fire load	0.257 MJ
Weight	11.8 g

Environmental requirements

Processing temperature	-35 … +85 °C

Commercial data

Product Group	16 (Rail Mounted Terminal Blocks with CCC)
eCl@ss 10.0	27-14-11-27
eCl@ss 9.0	27-14-11-27
ETIM 8.0	EC000903
ETIM 7.0	EC000903
ECCN	NO DATA
PU (SPU)	25 pcs

Subject to changes. Please also observe the further product documentation!

WAGO GmbH & Co. KG
Hansastr. 27
32423 Minden
Phone: +49571 887-0 | Fax: +49571 887-169
Email: info.de@wago.com | Web: www.wago.com

Do you have any questions about our products?
We are always happy to take your call at +49 (571) 887-44222.

Packaging type	box
Country of origin	DE
GTIN	4017332553773
Customs tariff number	85369010000

Environmental Product Compliance

CAS-No.	7439-92-1
REACH Candidate List Substance	Lead
RoHS Compliance Status	Compliant,With Exemption
RoHS Exemption	7(a) 7(c)-I
SCIP notification number (Bulgaria)	73607ee4-4ee1-4d49-a7eb-a7379efc8650
SCIP notification number (Czech Republic)	514ecb7a-8118-48d2-a416-53a9b734a5ce

Optional accessories

Marking accessories

Marker

Item no.: 2009-145
Mini-WSB Inline; for Smart Printer; 1700 pieces on roll; stretchable 5 - 5.2 mm; plain; snap-on type; white
www.wago.com/2009-145

Item no.: 248-501
Mini-WSB marking card; as card; not stretchable; plain; snap-on type; white
www.wago.com/248-501

Jumpers

Jumper

Item no.: 280-492
Jumper; 2-way; insulated; gray
www.wago.com/280-492

Tool

Operating tool

Item no.: 210-720
Operating tool; Blade: 3.5 x 0.5 mm; with a partially insulated shaft; multicoloured
www.wago.com/210-720

Insulation stop

Insulation stop

Item no.: 280-472
Insulation stop; 0.75 - 1 mm²; 5 pieces/strip; black
www.wago.com/280-472

Item no.: 280-470
Insulation stop; 0.08 - 0.2 mm² "s" (0.14 mm² "f-st"); 5 pieces/strip; white
www.wago.com/280-470

Subject to changes. Please also observe the further product documentation!

WAGO GmbH & Co. KG
Hansastr. 27
32423 Minden
Phone: +49571 887-0 | Fax: +49571 887-169
Email: info.de@wago.com | Web: www.wago.com

Do you have any questions about our products?
We are always happy to take your call at +49 (571) 887-44222.

	Item no.: 280-471 Insulation stop; 0.25 - 0.5 mm²; 5 pieces/strip; light gray	www.wago.com/280-471

End plate

End plate

	Item no.: 870-518 End and intermediate plate; 2 mm thick; gray	www.wago.com/870-518
	Item no.: 870-519 End and intermediate plate; 2 mm thick; orange	www.wago.com/870-519

Downloads

Documentation

Bid Text

870-523/281-593 X81 - Datei	2019 年2月19 日	xml 3.4 kB	Download
870-523/281-593 doc - Datei	2015 年2月11 日	doc 25.6 kB	Download

Additional Information

Disposal and Recycling Electrical and electronic equipment, Batteries, Packaging	V 1.1.0 2022 年8月18 日	pdf 2.2 MB	Download

CAD/CAE-Data

CAD data

2D/3D Models 870-523/281-593	URL	Download

CAE data

EPLAN Data Portal 870-523/281-593	URL	Download
WSCAD Universe 870-523/281-593	URL	Download
ZUKEN Portal 870-523/281-593	URL	Download
EPLAN Data Portal 870-523/281-593	URL	Download

WSCAD Universe 870-523/281-593

Subject to changes. Please also observe the further product documentation!

WAGO GmbH & Co. KG
Hansastr. 27
32423 Minden
Phone: +49571 887-0 | Fax: +49571 887-169
Email: info.de@wago.com | Web: www.wago.com

Do you have any questions about our products?
We are always happy to take your call at +49 (571) 887-44222.

	URL	Download

Asset Administration Shell

Asset Administration Shell 870-523/281-593	URL	Download

Environmental Product Compliance

Compliance Search

Environmental Product Compliance 870-523/281-593 Component terminal block; double-deck; with suppressor diode; 24 VAC; for DIN-rail 35 x 15 and 35 x 7.5; 2.5 mm²; CAGE CLAMP®; 2,50 mm²; gray	URL	Download

Installation Notes

WAGO GmbH & Co. KG
Hansastr. 27
32423 Minden
Phone: +49571 887-0 | Fax: +49571 887-169
Email: info.de@wago.com | Web: www.wago.com

Do you have any questions about our products?
We are always happy to take your call at +49 (571) 887-44222.