PRODUCT CATALOG

HIROSE ELECTRIC CO.,LTD.

KMS-560A Series

Miniature RF Switch for Automotive

Coax Switch

6 GHz

Automotive

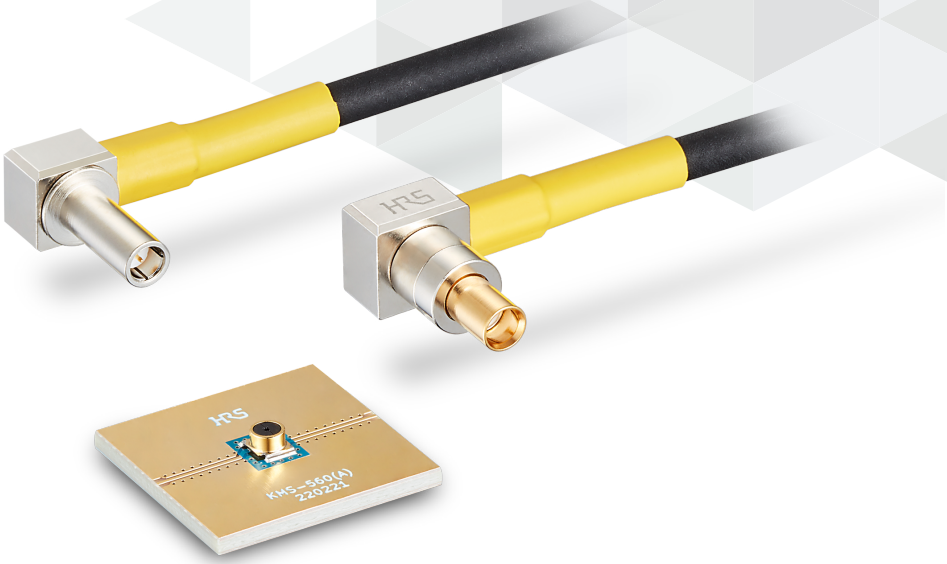

Product Page
https://www.hirose.com/en/product/series/KMS-560A/

Feb. 2023

Aug.1.2025 Copyright 2025 HIROSE ELECTRIC CO., LTD. All Rights Reserved.

Overview

The KMS-560A series is a miniature RF switch developed for the inspection and measurement of high-frequency automotive circuits up to 6GHz. The compact design simplifies RF circuit inspection during manufacturing.

Circuit performance can be verified by simply inserting the external plug into the board-mounted receptacle. This action re-directs the circuit from normal condition to the plug side. Removing the plug restores the circuit to its normal condition.

Features

1. High Frequency: DC to 6GHz

2. Contact Design Prevents Dust Intrusion

With Hirose's double-bending design, any dust particles do not affect the stability/reliability of the contacts.

3. Wide Self-Alignment Range

The plug guide allows for a smooth and stable mating operation

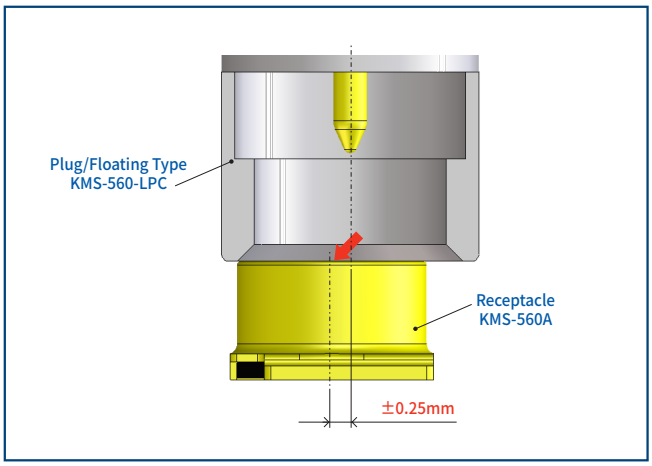

Self-Alignment Range

4. High Heat Resistance: 105°C

5. Suitable for Automotive Applications including Telematics, Infotainment and Antenna.

6. Beryllium Free, Halogen Free

All materials and substances used to produce this receptacle comply with Halogen and Beryllium free standards.

*Definition according to IEC 61249-2-21.Br 900ppm Max., Cl 900ppm Max., and Br + Cl 1500ppm Max.

Aug.1.2025 Copyright 2025 HIROSE ELECTRIC CO., LTD. All Rights Reserved.

Product Specifications

Operating Temperature (Note 1)		-40 to +105°C
Rated Power		4W
Frequency Range		DC to 6GHz
V.S.W.R.	Unmated Condition	1.5 Max. (DC to 6GHz)
	Mated Condition (Note 2)	
Insertion Loss	Unmated Condition	1.4dB Max. (DC to 6GHz)
	Mated Condition (Note 2)	
Isolation (Note 2)		10dB Min. (DC to 6GHz)

Note 1：Includes the temperature rise due to current flow.
Note 2：Measured in the mated condition with KMS560LP-SMAJ-L100.

Items	Specifications	Conditions
Contact Resistance	Center : 100mΩ Max. Outer : 50mΩ Max.	1mA AC Max. (or 1KHz)
Insulation Resistance	100MΩ Min.	500V DC
Withstanding Voltage	No insulation breakdown	500V AC for 1 min.
Mating Durability	Contact Resistance : Center : 100mΩ Max. Outer : 50mΩ Max.	100 times
Vibration Resistance	No electrical discontinuity of 1μs or more Contact Resistance : Center : 100mΩ Max. Outer : 50mΩ Max. No damage, crack or looseness of parts	Frequency 10 to 500Hz, acceleration of 49m/s^2, amplitude of 0.7mm, in 3 axis directions for 11 min. Test for 24 hours in total
Shock Resistance		Acceleration : 980m/s^2, duration : 6ms, sine halfwave, Test 10 times in 3 axial directions
Temperature Cycles	Contact Resistance : Center : 100mΩ Max. Outer : 50mΩ Max. Insulation Resistance : 10MΩ Min. No damage, crack or looseness of parts	Temperature : -40±2 → +15 to +35 → +105±2 → +15 to +35°C Time : 30 → 5 → 30 → 5 min. 1,000 cycles
Damp Heat Cycles		Left at temperature of 25°C±2°C and humidity of 65% for 25 hours
Dry Heat	Contact Resistance : Center : 100mΩ Max. Outer : 50mΩ Max. Insulation Resistance : 10MΩ Min. No damage, crack or looseness of parts	Left at temperature of 105±2°C for 1,000 hours
Humidity Resistance	Contact Resistance : Center : 100mΩ Max. Outer : 50mΩ Max. Insulation Resistance : 10MΩ Min. No damage, crack or looseness of parts No evidence of corrosion which affects to operation of connector	Left at temperature of 85±2°C and humidity of 85% for 1,000 hours

Note：Please refer to the specification sheet for details.

Materials / Finish

Component	Material	Color / Finish	Remarks
Shell	Brass	Gold Plated over Nickel Underplating	-
Insulator	Polyamide	Black	UL94HB
Common Contact	Titanium Copper	Gold Plated over Nickel Underplating	-
Antenna Contact	Phosphor Bronze	Gold Plated over Nickel Underplating	-

Aug.1.2025 Copyright 2025 HIROSE ELECTRIC CO., LTD. All Rights Reserved.

Product Number Structure

Refer to the chart below when determining the product specifications from the product number.
Please select from the product numbers listed in this catalog when placing orders.

● Receptacle

KMS-560 A (800)

❶ ❷ ❸

❶ Series Name	KMS-560	❸ Specifications	(800): Standard, Emboss tape packaging (3,000pcs/reel)
❷ Applications	A : For Automotive, Consumer, and Other Applications		

● Measurement Plug

KMS560 LP # - SMAJ - L100 (800)

❶ ❷ ❸ ❹ ❺ ❻

❶ Series Name	KMS-560	❹ SMA Connector (Note)	SMAJ : SMA Jack Connection
❷ Plug Type	LP : Right Angle Plug	❺ Cable Length (Note)	L100 : 100mm
❸ Mating Type	None : Friction Locking Type C : Floating Type	❻ Specifications	(800) : Standard (1pc/bag)

Note : Cable length customizing and change to SMA plug type are available. Please contact Hirose representative.

Aug.1.2025 Copyright 2025 HIROSE ELECTRIC CO., LTD. All Rights Reserved.

High Frequency Performance (Typical Data)

●Normally Closed (Not Mated with the plug)

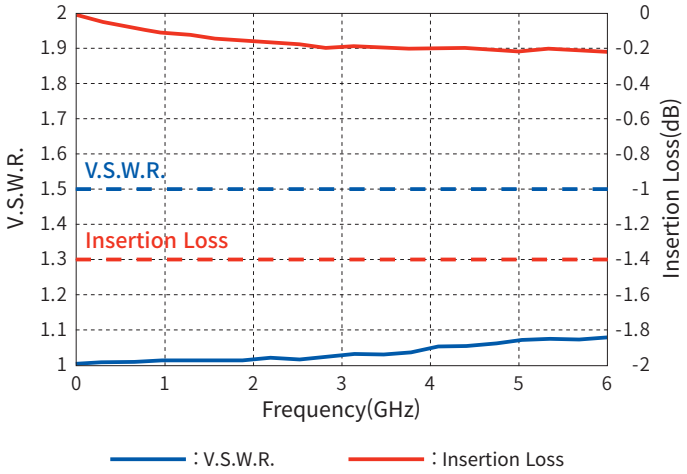

*The characteristics of the evaluation board and SMA connector are excluded.

●Normally Open (Mated with the plug)

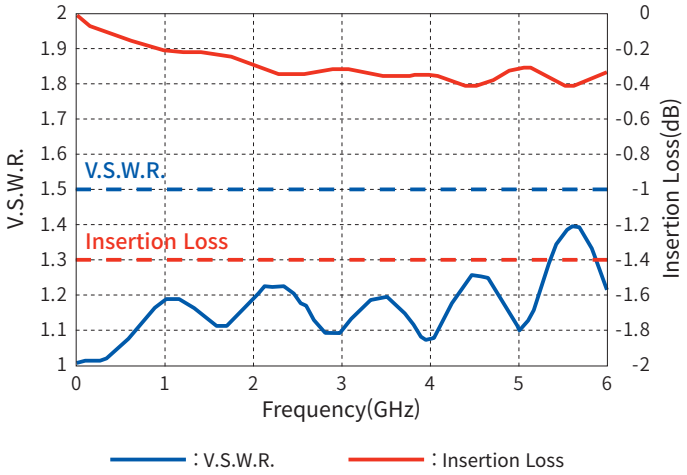

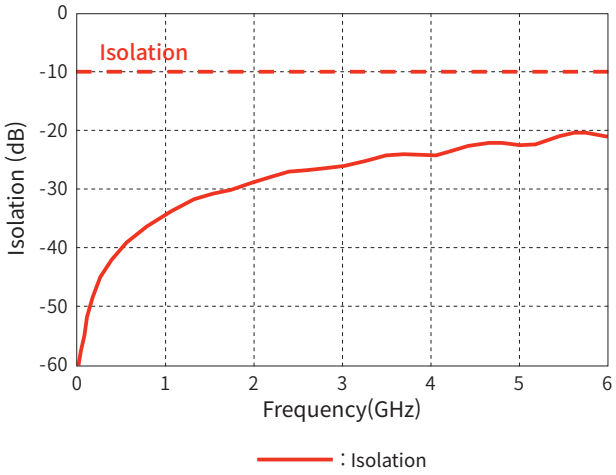

*The characteristics of the evaluation board and SMA connector are excluded.

Aug.1.2025 Copyright 2025 HIROSE ELECTRIC CO., LTD. All Rights Reserved.

Aug.1.2025 Copyright 2025 HIROSE ELECTRIC CO., LTD. All Rights Reserved.

Receptacle

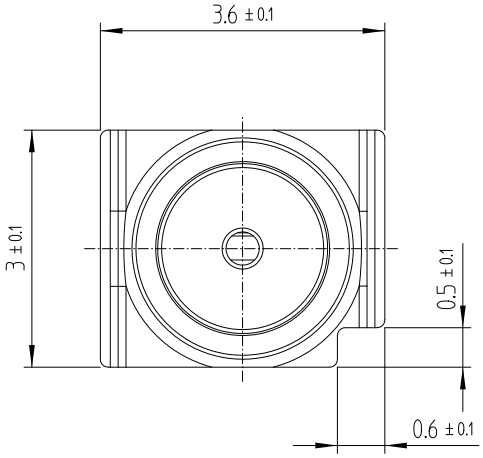

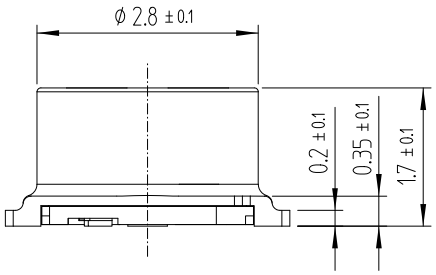

● Circuit Diagram

Not mated with the plug (N.C.)

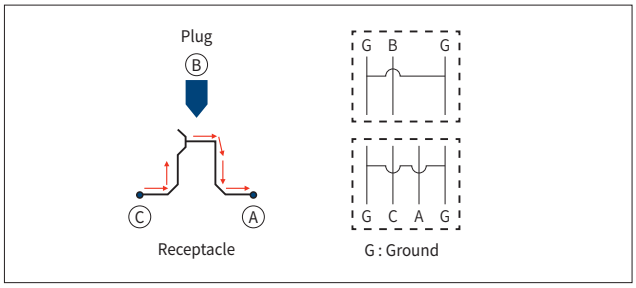

Mated with the plug (N.O.)

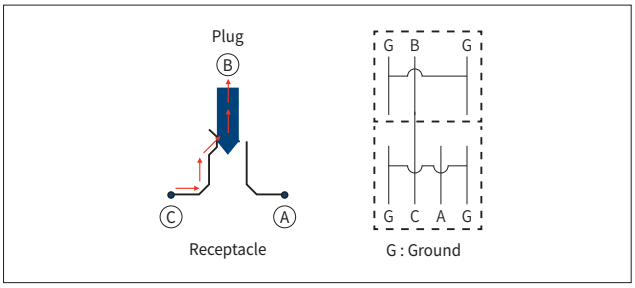

● Recommended Land Pattern & Metal Mask Layout

*Recommended metal mask thickness: 0.1mm Max.

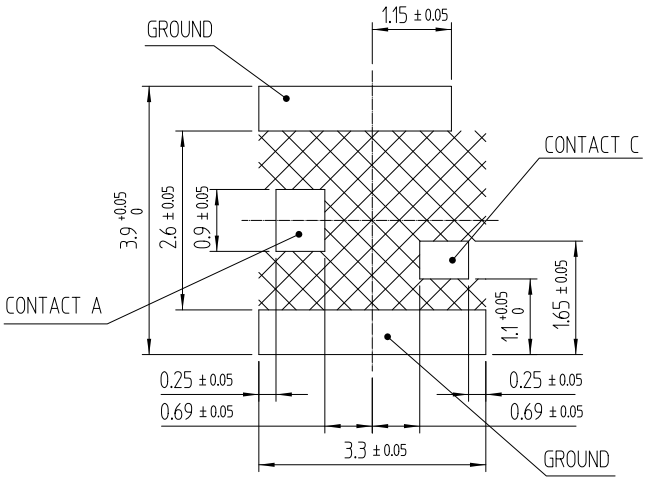

: No copper layer or solder resist on PCB surface

Part No.	HRS No.	Purchase Unit
KMS-560A(800)	CL0480-0903-0-00	3,000pcs per reel

Recommended Solder Temperature Profile

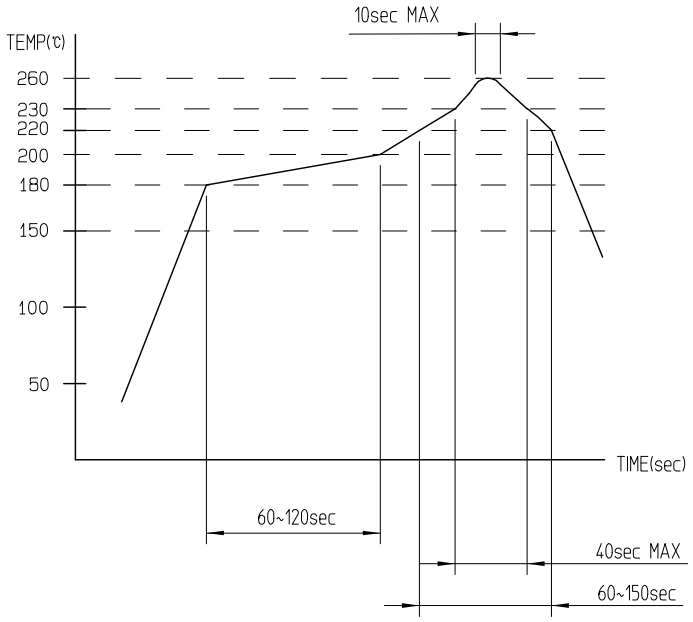

[Conditions]

Peak Temperature : 260°C Max. within 10 seconds.
230°C Min. : 40 seconds Max.
220°C Min. : 60-150 seconds
180 to 200°C : 60-120 seconds

Reflow Cycle : 2 cycles Max.

Packaging Specifications

● Embossed Tape Dimensions

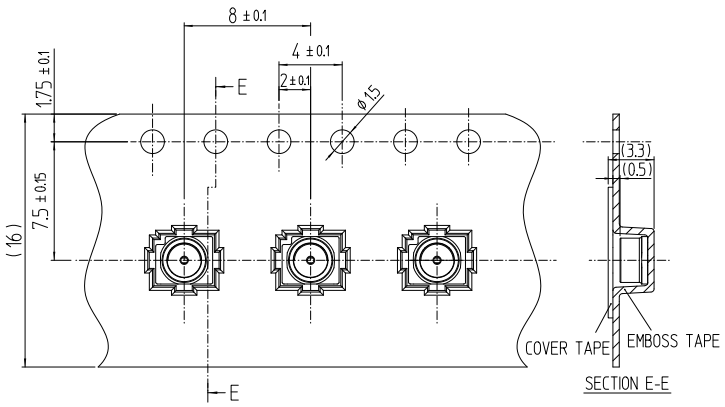

● Reel Dimensions

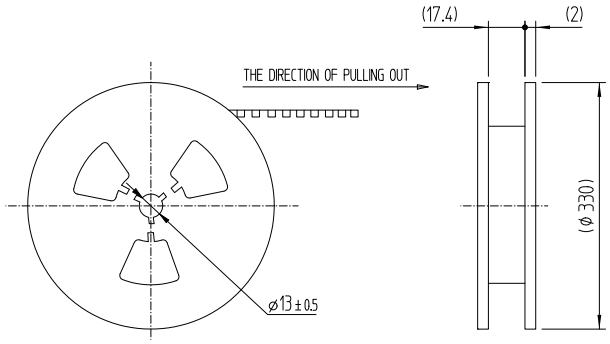

Aug.1.2025 Copyright 2025 HIROSE ELECTRIC CO., LTD. All Rights Reserved.

Measurement Plug

●Non-Floating Type (Friction Lock)

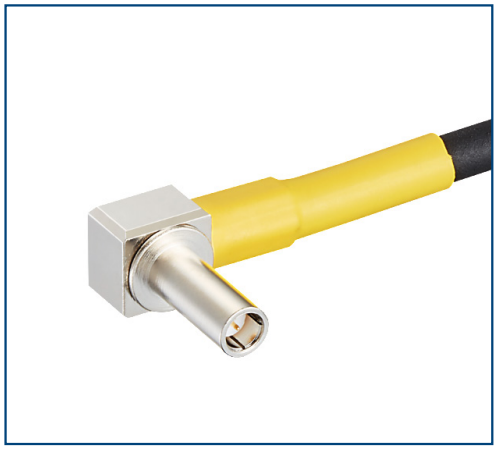

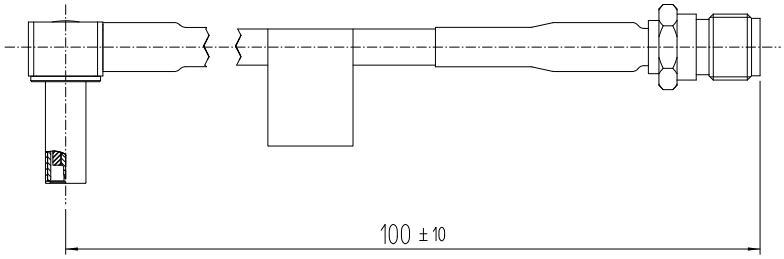

Part No.	HRS No.	Mating Durability (Note 1)	Applicable Cable	Purchase Unit
KMS560LP-SMAJ-L100(800)	CL0480-9904-0-00	1,000 cycles	1.5D-HQEW(Fujikura Ltd.)	1pc per bag

Note 1:This mating durability only applies to this specific plug, not for Receptacle combination.
Note 2:Plugs are only for performance measurement during trial evaluation or for inspection during production process purposes.
Note 3:This plug has a friction lock mechanism to keep the plug connected with the receptacle without foreign assistance.
However, avoid pulling on the cable and make sure the plug is vertical to the receptacle before use.
Note 4:Cable length customizing and change to SMA plug type are available. Please contact Hirose representative.

●Floating Type

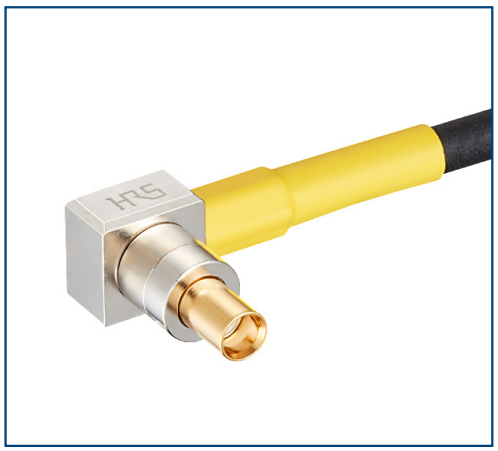

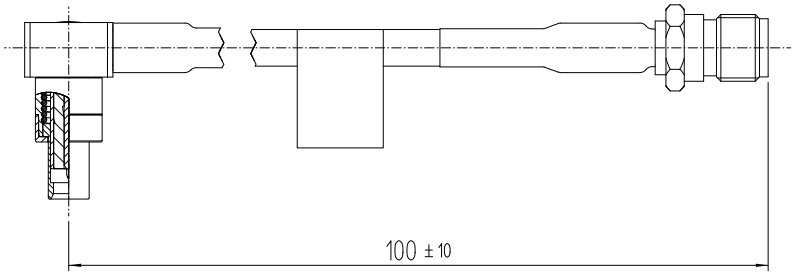

Part No.	HRS No.	Mating Durability (Note 1)	Applicable Cable	Purchase Unit
KMS560LPC-SMAJ-L100(800)	CL0480-9905-0-00	5,000 cycles	1.5D-HQEW(Fujikura Ltd.)	1pc per bag

Note 1:This mating durability only applies to this specific plug, not for Receptacle combination.
Note 2:Plugs are only for performance measurement during trial evaluation or for inspection during production process purposes.
Note 3:Cable length customizing and change to SMA plug type are available. Please contact Hirose representative.

Aug.1.2025 Copyright 2025 HIROSE ELECTRIC CO., LTD. All Rights Reserved.

Precautions

- This product cannot be washed.
- This product is intended to be used for circuit inspection only.
- Do not perform manual soldering for mounting of KMS-560A, since it could result in solder and flux wicking to the contact areas.
- Refrain from using land patterns or metal mask dimensions other than those specified by Hirose as it may result in solder flux and wicking resulting in product failure.
- Refrain from using this product in environments of dust, high humidity, mixed gas, and extremely high and low temperatures outside of the range listed in the specification sheet.
- When cutting the PCB, make sure that particles do not enter the mounted receptacle in order to prevent contact failure resulting from debris entering the contact portion of the connector.

While Taking into Consideration

Specifications mentioned in this catalog are reference values.
When considering to order or use this product, please confirm the drawing and product specifications sheets.
Use an appropriate cable when using the connector in combination with cables.
If considering usage of a non-specified cable, please contact your sales representative.
If assembly process is done by jigs & tools which are not identified by Hirose, assurance will not be given.
If considering usage for below mentioned applications, please contact your sales representative.
In cases where the application will demand a high level of reliability, such as automotive, medical instruments, public infrastructure, aerospace/ defense etc. Hirose must review before assurance of reliability can be given.

Aug.1.2025 Copyright 2025 HIROSE ELECTRIC CO., LTD. All Rights Reserved.

HIROSE

HIROSE ELECTRIC CO.,LTD. 2-6-3,Nakagawa Chuoh,Tsuzuki-Ku,Yokohama-Shi 224-8540,JAPAN
https://www.hirose.com/

※ The contents of this catalog are current as of date of 02/ 2023. Contents are subject to change without notice for the purpose of improvements.
※ The HRS logo and "HIROSE" are trademarks of HIROSE ELECTRIC CO., LTD.