SMA Female Commercial Grade Connector Solder Attachment .137 inch End Launch PCB, .020 Inches Diameter Pin



PE51740

Configuration

- SMA Female Connector
- 50 Ohms
- Straight Body Geometry
- Connector Interface Types: .137 inch End Launch
- Commercial Grade Design

Features

- Max. Operating Frequency 18 GHz
- Excellent VSWR of 1.2:1
- Gold Plated Beryllium Copper Contact

Applications

- General Purpose Test
- PCB Applications

Description

Pasternack's PE51740 , SMA, Commercial Grade, connector with solder attachment for .137 inch End Launch PCB is part of our full line of RF components available for same-day shipping. Our SMA female connector operates up to a maximum frequency of 18 GHz and offers excellent VSWR of 1.2:1.

Our SMA female connector PE51740 datasheet specifications and drawing with dimensions are shown below in this PDF. Pasternack's broad catalog of RF, microwave and millimeter wave connectors allows designers to configure and customize their signal connections however they like. Whether the need is to provide an I/O for a board design, or simply create a custom cable assembly configuration, Pasternack has the right connector for the job. Pasternack can also expertly build your custom cable assemblies for you and ship same-day.

Electrical Specifications

Description	Minimum	Typical	Maximum	Units
Frequency Range	DC		18	GHz
VSWR			1.2:1	
Insertion Loss			0.3	dB
Dielectric Withstanding Voltage (AC)			1,000	Vrms
Inner Conductor DC Resistance			6	mOhms
Outer Conductor DC Resistance			2.5	mOhms
Insulation Resistance	5,000			MOhms
RF Leakage	-90			dB
Impedance		50		Ohms

Mechanical Specifications

Size

Length	0.52 in [13.21 mm]
Width	0.32 in [8.13 mm]
Height	0.4 in [10.16 mm]
Weight	0.00439 lbs [1.99 g]
Mating Cycles	500 Cycles
Mating Torque	0.9 to 1.13 in-lbs [[0.10 to 0.13 Nm]]

© 2023 Infinite Electronics, Inc. Pasternack is a registered trademark of Infinite Electronics, Inc.
+1 (866) 558-2786 | sales@pasternack.com | pasternack.com

SMA Female Commercial Grade Connector Solder Attachment .137 inch End Launch PCB, .020 Inches Diameter Pin



PE51740

Material Specifications

Description	Material	Plating
Contact	Beryllium Copper	Gold
Insulation	PTFE	
Outer Conductor	Brass	Nickel
Body	Brass	Gold

Environmental Specifications

Temperature

Operating Range	-55 to +125 deg C

Compliance Certifications (see product page for current document)

Plotted and Other Data

Notes:

SMA Female Commercial Grade Connector Solder Attachment .137 inch End Launch PCB, .020 Inches Diameter Pin from Pasternack Enterprises has same day shipment for domestic and International orders. Our RF, microwave and millimeter wave products maintain a 99.4% availability and are part of the broadest selection in the industry.

Click the following link (or enter part number in "SEARCH" on website) to obtain additional part information including price, inventory and certifications: SMA Female Commercial Grade Connector Solder Attachment .137 inch End Launch PCB, .020 Inches Diameter Pin PE51740

URL: https://www.pasternack.com/sma-female-.137-end-launch-pcb-connector-pe51740-p.aspx

The information contained within this document is accurate to the best of our knowledge and representative of the part described herein. It may be necessary to make modifications to the part and/or the documentation of the part in order to impliment improvements. Pasternack Enterprises reserves the right to make such changes as required. Unless otherwise stated, all specifications are nominal. Pasternack Enterprises does not make any representation or warranty regarding the suitability of the part described herein for any particular purpose, and Pasternack Enterprises does not assume liability arising out of the use of any part or document.

© 2023 Infinite Electronics, Inc. Pasternack is a registered trademark of Infinite Electronics, Inc.

PE51740 CAD Drawing

SMA Female Commercial Grade Connector Solder Attachment
.137 inch End Launch PCB, .020 Inches Diameter Pin

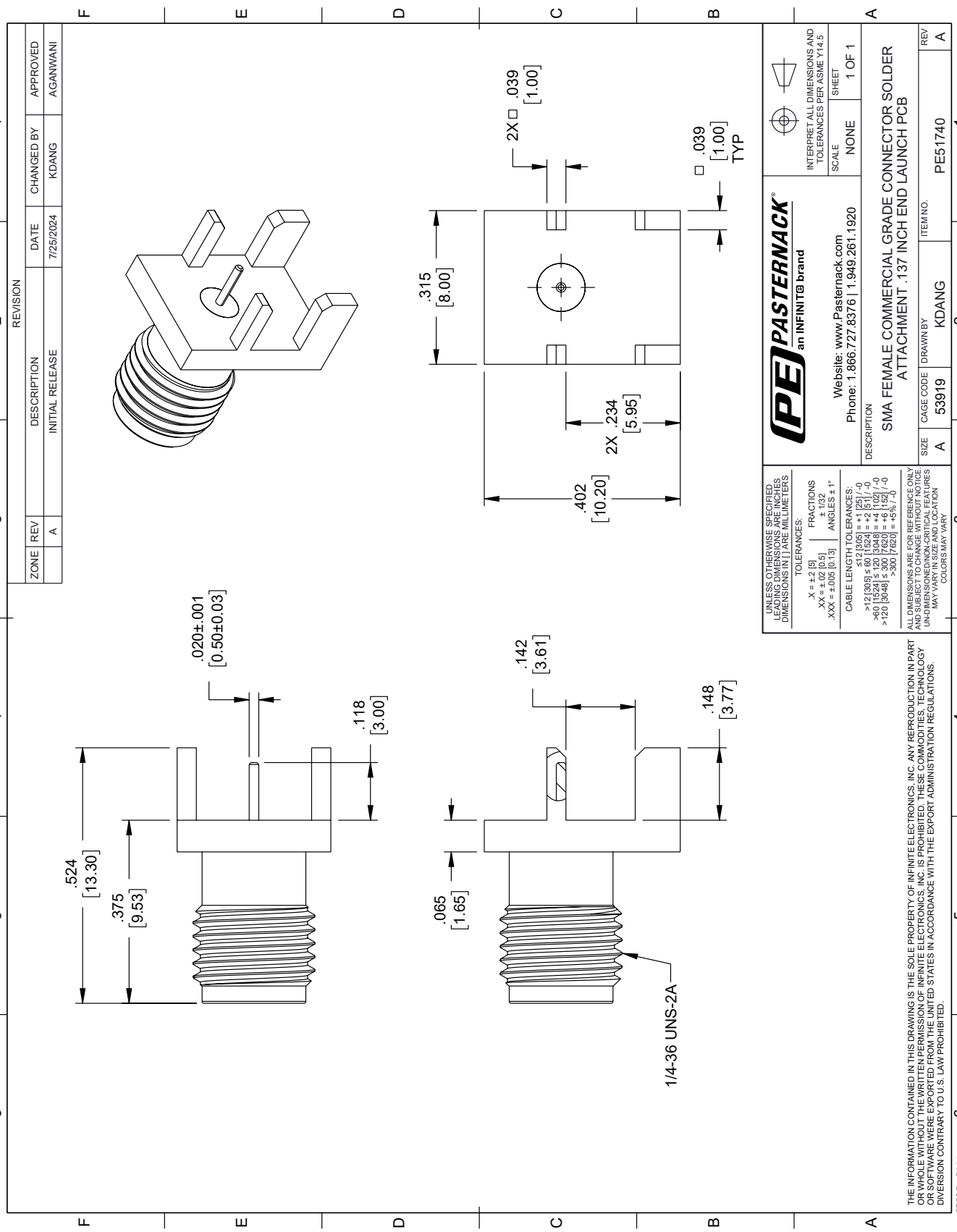

© 2023 Infinite Electronics, Inc. Pasternack is a registered trademark of Infinite Electronics, Inc.