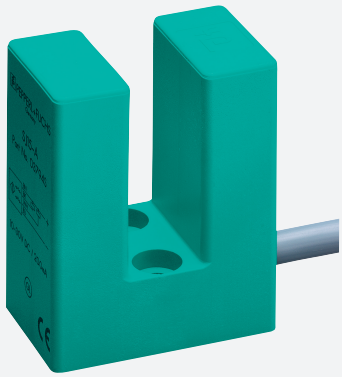

Inductive slot sensor

SJ15-E

- 15 mm slot width
- 3-wire DC

Dimensions

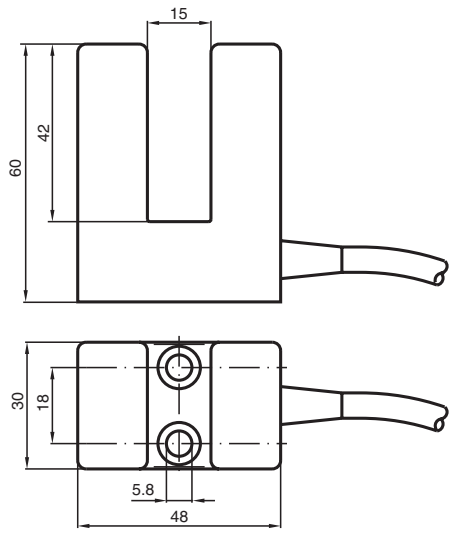

Technical Data

General specifications		
Switching function		Normally open (NO)
Output type		NPN
Slot width		15 mm
Depth of immersion (lateral)		17 ... 20 mm
Output polarity		DC
Output type		3-wire
Nominal ratings		
Operating voltage	U_B	10 ... 30 V DC
Switching frequency	f	0 ... 500 Hz
Reverse polarity protection		reverse polarity protected
Short-circuit protection		pulsing
Voltage drop	U_d	≤ 3 V
Operating current	I_L	0 ... 200 mA
No-load supply current	I_0	≤ 20 mA
Compliance with standards and directives		

Release date: 2025-07-14 Date of issue: 2025-07-14 Filename: 013149_eng.pdf

Technical Data

Standard conformity		
Standards		EN IEC 60947-5-2
Approvals and certificates		
UL approval		cULus Listed Load Type: General Purpose Circuitry: Class 2 Power Source Enclosure Type Rating: Type 1 Supply/Switching Voltage: 30 V DC Output Switching Current: 200 mA
CCC approval		CCC approval / marking not required for products rated ≤36 V
Ambient conditions		
Ambient temperature		-25 ... 70 °C (-13 ... 158 °F)
Mechanical specifications		
Connection type		cable
Housing material		PBT
Degree of protection		IP67
Cable		
Wire end ferrules		yes
Cable diameter		6.4 mm ± 0.2 mm
Bending radius		> 10 x cable diameter
Material		PVC
Color		Gray
Number of cores		3
Core cross section		0.75 mm^2
Length	L	2 m
Mass		221 g
Dimensions		
Height		60 mm
Width		30 mm
Length		48 mm

Connection Assignment

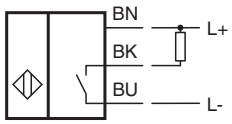

Release date: 2025-07-14 Date of issue: 2025-07-14 Filename: 013149_eng.pdf