SAC-4P- 3,0-PUR/P12FS - Sensor/actuator cable

1393005

https://www.phoenixcontact.com/us/products/1393005

Please be informed that the data shown in this PDF document is generated from our online catalog. Please find the complete data in the user documentation. Our general terms of use for downloads are valid.



Sensor/actuator cable, 4-position, PUR halogen-free, black-gray RAL 7021, free cable end, on Socket straight M12 Push Pull, coding: A, cable length: 3 m

Your advantages

- Easy and safe: 100 % electrically tested plug-in components
- Save time, thanks to installation with push-pull fast locking

Commercial data

Item number	1393005
Packing unit	1 pc
Minimum order quantity	1 pc
Sales key	BF06
Product key	BF1CCC
GTIN	4063151818500
Weight per piece (including packing)	99.25 g
Weight per piece (excluding packing)	95.25 g
Customs tariff number	85444290
Country of origin	PL

Technical data

Product properties

Product type	Sensor/actuator cable
Application	Standard
Number of positions	4
No. of cable outlets	1
Shielded	no
Coding	A

Insulation characteristics

Overvoltage category	II
Degree of pollution	3

Material specifications

Material	PA
Flammability rating according to UL 94	V0
Seal material	FKM
Material of grip body	TPU, hardly inflammable, self-extinguishing
Contact material	CuSn
Contact surface material	Ni/Au
Material for screw connection	Brass, nickel-plated

Electrical properties

Insulation resistance	≥ 100 MΩ
Nominal voltage U_N	250 V AC
	250 V DC
Nominal current I_N	4 A

Mechanical properties

Mechanical data

Insertion/withdrawal cycles	≥ 100

Signaling

Status display	No
Status display present	No

Connection data

Conductor connection

Tightening torque	M12 push-pull connectors

Connector

Connection 1

Type	free cable end

Connection 2

Type	Socket straight M12 Push Pull
Number of positions	4
Locking type	Push Pull
Coding type	A

Cable/line

Cable length	3 m

PUR halogen-free black [PUR]

Dimensional drawing	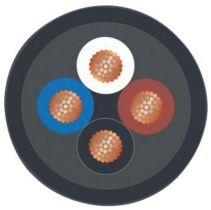
Cable weight	30 kg/km
UL AWM Style	20549 / 10493 (80°C/300 V)
Number of positions	4
Shielded	no
Cable type	PUR halogen-free black [PUR]
Conductor structure signal line	42x 0.10 mm
AWG signal line	22
Conductor cross section	4x 0.34 mm² (Signal line)
Wire diameter incl. insulation	1.27 mm ±0.02 mm
External cable diameter	4.20 mm ±0.15 mm
Outer sheath, material	PUR
External sheath, color	black-gray RAL 7021
Conductor material	Bare Cu litz wires
Material wire insulation	PP
Single wire, color	brown, white, blue, black
Thickness, insulation	≥ 0.21 mm
Thickness, outer sheath	approx. 0.50 mm
Overall twist	4 wires, twisted
Max. conductor resistance	≤ 58 Ω/km
Insulation resistance	≥ 1 GΩ*km
Nominal voltage, cable	≤ 300 V
Test voltage	≥ 3000 V
Minimum bending radius, fixed installation	5 x D
Minimum bending radius, flexible installation	10 x D
Smallest bending radius, fixed installation	21 mm

Smallest bending radius, movable installation	42 mm
Max. bending cycles	10000000
Halogen-free	in accordance with DIN VDE 0472 part 815
	in accordance with DIN EN 50267-2-1
Flame resistance	in accordance with UL 758/1581 FT2
	DIN EN 60332-2-2 (20 s)
Resistance to oil	in accordance with DIN EN 60811-2-1
Other resistance	Highly resistant to acids, alkaline solutions and solvents
	hydrolysis and microbe resistant
	partly UV-resistant (in accordance with DIN EN ISO 4892-2-A)
	Low adhesion
	abrasion-resistant
Special properties	Flexible cable conduit capable
	Silicone-free
	Free of substances which would hinder coating with paint or varnish
	flexible
Ambient temperature (operation)	-40 °C ... 80 °C (cable, fixed installation)
	-25 °C ... 80 °C (Cable, flexible installation)

Environmental and real-life conditions

Ambient conditions

Degree of protection	IP65
	IP67
Ambient temperature (operation)	-25 °C ... 85 °C (Plug / socket)

Standards and regulations

Standard designation	M12-Push-Pull
Standards/specifications	IEC 61076-2-010

Drawings

Dimensional drawing

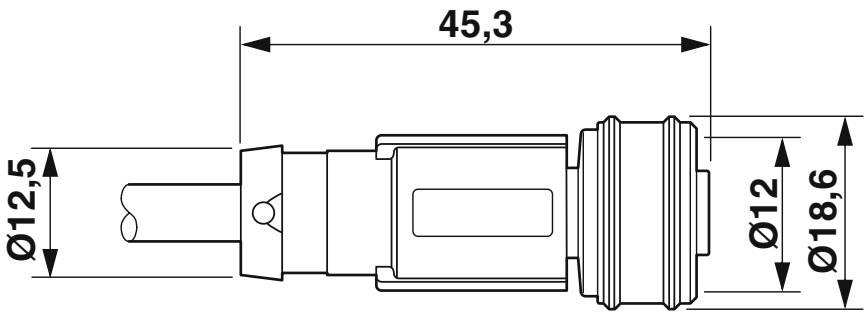

M12 push-pull female connector, straight

Circuit diagram

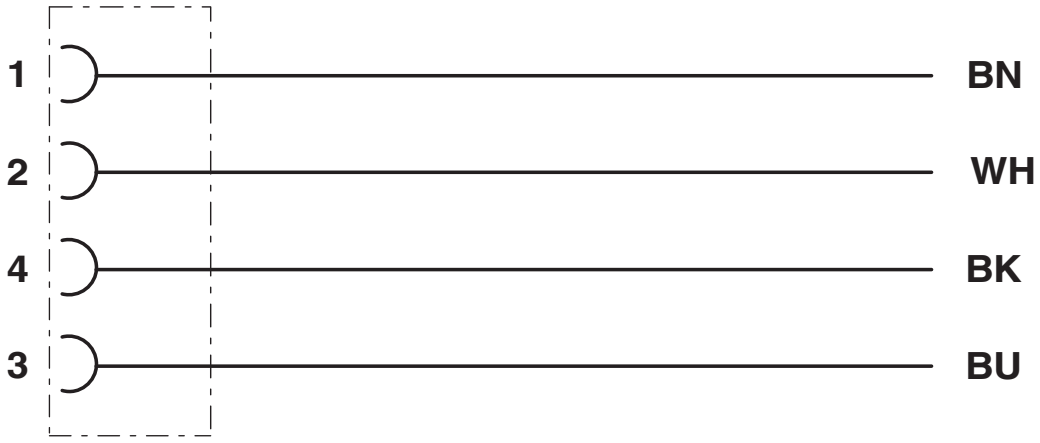

Schematic diagram

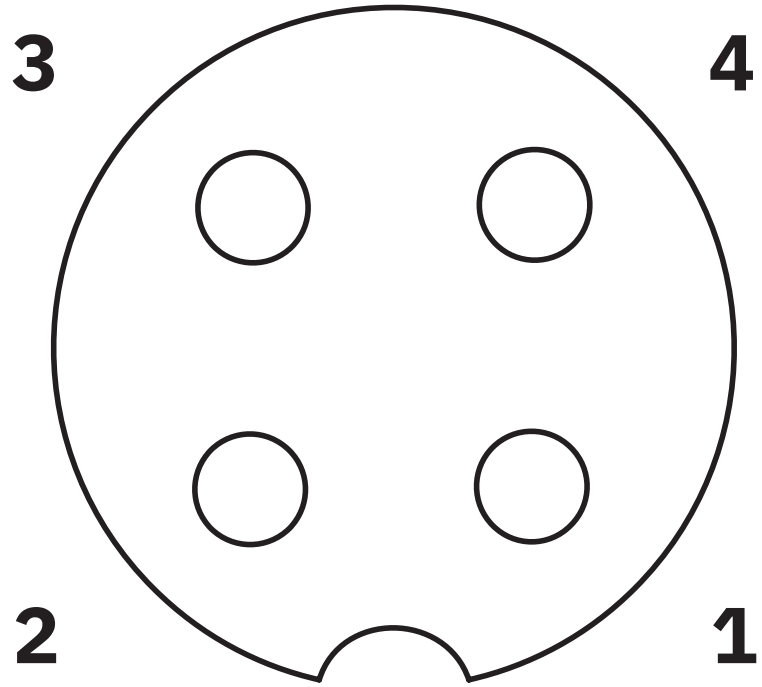

Pin assignment socket M 12

Classifications

ECLASS

ECLASS-11.0	27060311
ECLASS-12.0	27060311
ECLASS-13.0	27060311

ETIM

ETIM 9.0	EC001855

UNSPSC

UNSPSC 21.0	26121600

Phoenix Contact 2024 © - all rights reserved
https://www.phoenixcontact.com

Phoenix Contact USA
586 Fulling Mill Road
Middletown, PA 17057, United States
(+717) 944-1300
info@phoenixcon.com