| ORDER NO. | WOODHEAD NO. | COLOR |
|---|---|---|
| 130149-0039 | 2747MB | WHITE |

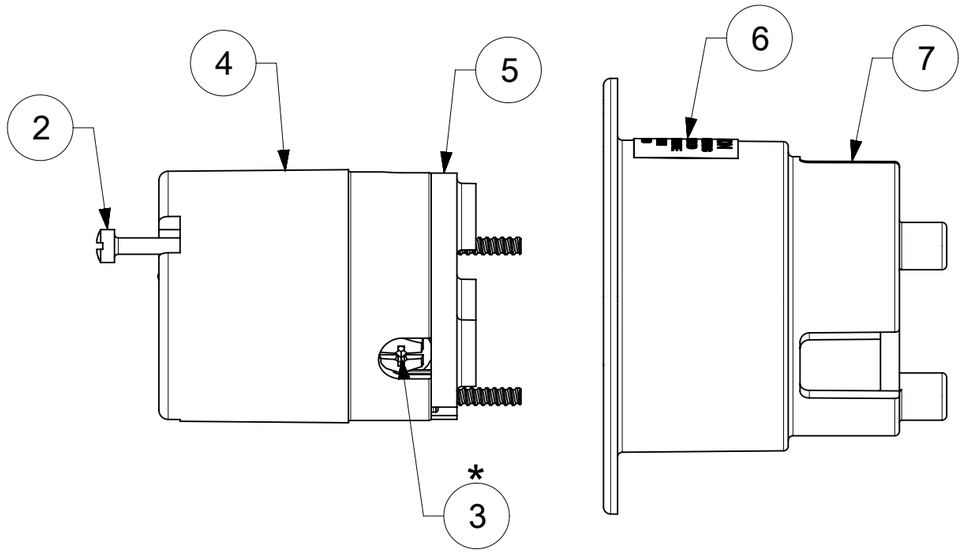


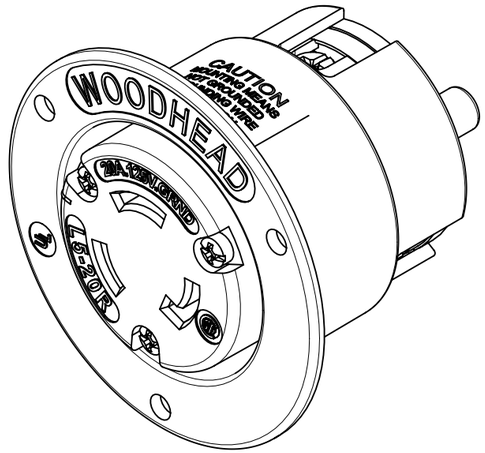


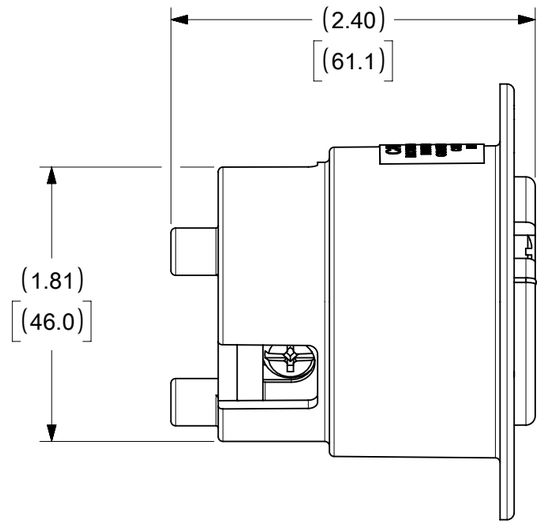


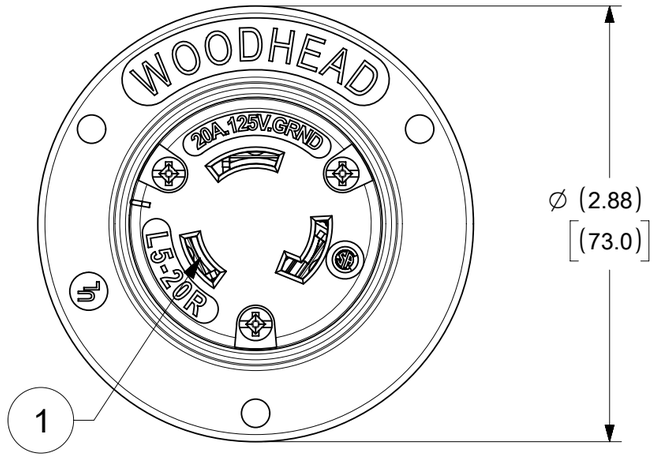


## WIRING TERMINATION

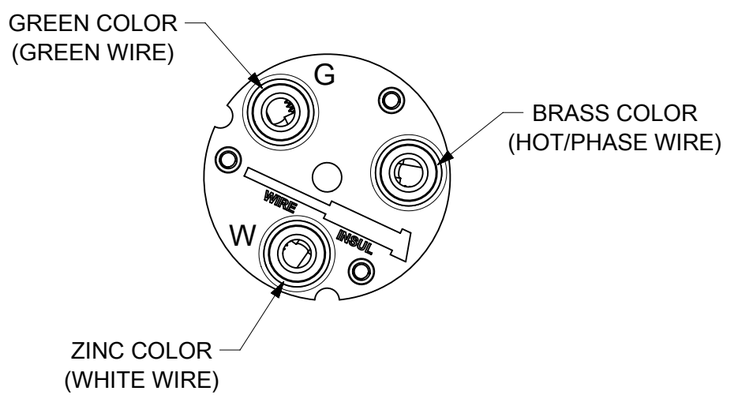


* FOR SCREW TORQUE, SEE ASSEMBLY INSTRUCTIONS

| ITEM NO. | DESCRIPTION | MATERIAL | QTY. |
|---|---|---|---|
| 1 | CLIPS | BRASS, NICKEL PLATED | 3 |
| 2 | RETAINING SCREWS | STAINLESS STEEL | 3 |
| 3 | TERMINAL SCREWS/CLAMP ASSEMBLY | BRASS, ZINC PLATED | 3 |
| 4 | INSERT | NYLON | 1 |
| 5 | TERMINAL COVER | POLYCARBONATE | 1 |
| 6 | CAUTION LABEL | PLASTIC | 1 |
| 7 | FLANGED OUTLET HOUSING | NYLON | 1 |

| DOCUMENT STATUS | P1 | RELEASE DATE | 2023/12/08 18:36:51 |
|---|---|---|---|

THIS DRAWING CONTAINS INFORMATION THAT IS PROPRIETARY TO MOLEX ELECTRONIC TECHNOLOGIES, LLC AND SHOULD NOT BE USED WITHOUT WRITTEN PERMISSION

FUNCTIONAL SYMBOLS: EA = 0; EC = 0; EP = 0

DIVISIONAL SYMBOLS

DIMENSION UNITS: INCH/MM — SCALE: NTS

GENERAL TOLERANCES (UNLESS SPECIFIED)

| | MM | INCH |
|---|---|---|
| 4 PLACES | ± | ± |
| 3 PLACES | ± | ± 0.005 |
| 2 PLACES | ± | ± 0.01 |
| 1 PLACE | ± | ± |
| 0 PLACES | ± | ± |
| ANGULAR TOL | ± 0.5 ° | |

DRAFT WHERE APPLICABLE MUST REMAIN WITHIN DIMENSIONS

CURRENT REV DESC: MIGRATION TO ECTR/NX

EC NO: 668448
DRWN: VHANDI 2021/06/17
CHK'D: DNGUYEN62 2021/09/28
APPR: HKNEELAND 2023/12/08

INITIAL REVISION:
DRWN: VHANDI 2021/06/17
APPR: HKNEELAND 2023/12/08

THIRD ANGLE PROJECTION | DRAWING: B-SIZE | SERIES: 130149

molex

FLANGED OUTLET NEMA L5-20 SIZE B

PRODUCT CUSTOMER DRAWING

| DOCUMENT NUMBER | DOC TYPE | DOC PART | REVISION |
|---|---|---|---|
| 1301490039 | PSD | 000 | A |

| MATERIAL NUMBER | CUSTOMER | SHEET NUMBER |
|---|---|---|
| SEE TABLE | GENERAL MARKET | 1 OF 1 |

FORMAT: Eng-tega-prod-B
REVISION: E
DATE: 2020/01/14