

Inductive sensor

NJ20+U1+E2-Y287109

- Comfort series
- 20 mm flush

Dimensions

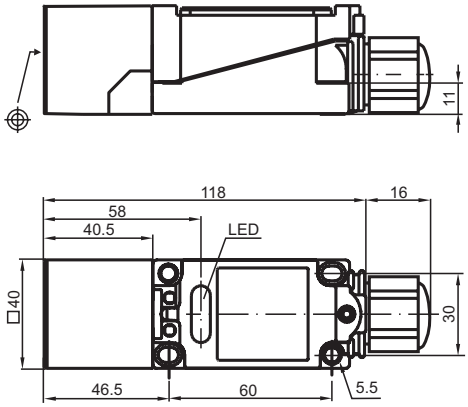

Technical Data

General specifications		
Switching function		Normally open (NO)
Output type		PNP
Rated operating distance	s_n	20 mm
Installation		flush
Output polarity		DC
Assured operating distance	s_a	0 ... 16.2 mm
Actual operating distance	s_r	18 ... 22 mm typ. 20 mm
Reduction factor r_{Al}		0.35
Reduction factor r_{Cu}		0.35
Reduction factor r_{304}		0.8
Output type		3-wire
Nominal ratings		
Operating voltage	U_B	10 ... 30 V
Switching frequency	f	0 ... 150 Hz
Hysteresis	H	1 ... 10 % typ. 5 %
Reverse polarity protection		reverse polarity protected

Release date: 2024-12-10 Date of issue: 2024-12-10 Filename: 287109_eng.pdf

Technical Data

Short-circuit protection		pulsing
Voltage drop	U_d	≤ 2.8 V
Voltage drop at I_L		
Voltage drop I_L = 1 mA, switching element on	U_d	0.5 ... 2.3 V typ. 0.9 V
Voltage drop I_L = 10 mA, switching element on	U_d	0.8 ... 2.2 V typ. 1.4 V
Voltage drop I_L = 20 mA, switching element on	U_d	0.9 ... 2.3 V typ. 1.5 V
Voltage drop I_L = 50 mA, switching element on	U_d	0.9 ... 2.5 V typ. 1.6 V
Voltage drop I_L = 100 mA, switching element on	U_d	1 ... 2.6 V typ. 1.8 V
Voltage drop I_L = 200 mA, switching element on	U_d	1.2 ... 2.8 V typ. 2 V
Operating current	I_L	0 ... 200 mA
Off-state current	I_r	0 ... 0.5 mA typ. 0.01 mA
Off-state current T_U =40 °C, switching element off		≤ 100 µA
No-load supply current	I_0	≤ 10 mA
Time delay before availability	t_v	≤ 50 ms
Operating voltage indicator		LED, green
Switching state indicator		LED, yellow
Functional safety related parameters		
$MTTF_d$		819 a
Mission Time (T_M)		20 a
Diagnostic Coverage (DC)		0 %
Compliance with standards and directives		
Standard conformity		
Standards		EN IEC 60947-5-2
Approvals and certificates		
UL approval		cULus Listed, General Purpose
CCC approval		CCC approval / marking not required for products rated ≤36 V
Ambient conditions		
Ambient temperature		-25 ... 70 °C (-13 ... 158 °F)
Storage temperature		-25 ... 85 °C (-13 ... 185 °F)
Mechanical specifications		
Connection type		screw terminals
Information for connection		A maximum of two conductors with the same core cross section may be mounted on one terminal connection! tightening torque 1.2 Nm + 10 %
Core cross section		up to 2.5 mm²
Minimum core cross-section		without wire end ferrules 0.5 mm² , with connector sleeves 0.34 mm²
Maximum core cross-section		without wire end ferrules 2.5 mm² , with connector sleeves 1.5 mm²
Cable gland		
Note		Sealing ring: Hole diameter 7 / 10.5 / 13 / 16 mm The dimension of the connection cable must correspond to the hole selected on the sealing ring.
Housing material		PBT with Viton seals and PVDF screwed connection
Sensing face		PBT
Degree of protection		IP68
Dimensions		
Height		40 mm
Width		40 mm
Length		118 mm

Release date: 2024-12-10 Date of issue: 2024-12-10 Filename: 287109_eng.pdf

Connection

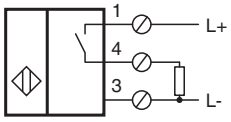

Release date: 2024-12-10 Date of issue: 2024-12-10 Filename: 287109_eng.pdf