HC-COM-Q08-I-CT-F - Contact insert

1079547

https://www.phoenixcontact.com/us/products/1079547

Please be informed that the data shown in this PDF document is generated from our online catalog. Please find the complete data in the user documentation. Our general terms of use for downloads are valid.



Contact insert, number of positions: 8+PE, size: COM, power contacts: 8, control contacts: 0, number of connections per position: 1, Socket, Crimp connection, 320 V, 16 A, 0.5 mm^2 ... 4 mm^2, application: Power

Product description

Contact insert, incl. 4 mounting screws

Commercial data

Item number	1079547
Packing unit	1 pc
Minimum order quantity	1 pc
Sales key	BF61
Product key	BF7ABH
Catalog page	Page 651 (C-2-2019)
GTIN	4055626799490
Weight per piece (including packing)	20.5 g
Weight per piece (excluding packing)	20.22 g
Customs tariff number	85389099
Country of origin	CN

Technical data

Notes

General	Connectors may be operated only when there is no load/voltage.

Mounting

Assembly note	To ensure correct use, installation in housing with IP54 protection or better is required

Product properties

Product type	Contact insert with a fixed no. of positions
Series	HC-COM
Application	Power
Type	COM
Number of positions	8
Connection profile	8+PE
Contact numbering	1 - 8
Number of connections per position	1
No. of power contacts	8
No. of control contacts	0
Contact material type	turned

Insulation characteristics

Overvoltage category	III
Degree of pollution	3

Dimensions

Dimensional drawing	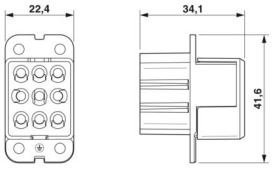
Width	25.6 mm
Height	48.05 mm
Length	45 mm

Mechanical characteristics

Contact diameter	2.5 mm

Connection data

Connection technology

Connection technology	Crimp connection
Number of connections per position	1
Connection in acc. with standard	IEC / EN

Conductor connection

Conductor cross section	0.5 mm² ... 4 mm²
Connection cross section AWG	20 ... 12
Stripping length of the individual wire	7.5 mm (Power)

Electrical properties

Rated voltage (III/2) contacts	500 V
Rated voltage (III/3)	320 V
Rated voltage for power contacts	500
Rated surge voltage	6 kV
Rated current	16 A

Mechanical properties

Mechanical data

Insertion/withdrawal cycles	≥ 500

Material specifications

Flammability rating according to UL 94	V0
Contact material	Copper alloy
Contact surface material	Ag (alternatively Au)
Contact carrier material	PC
Standards/regulations	PC: Fire protection in rail vehicles - requirement sets R22, R23, and R24 acc. to DIN EN 45545-2 (Risk level HL1 - HL3)

Environmental and real-life conditions

Ambient conditions

Ambient temperature (operation)	-40 °C ... 125 °C (including heating up of contacts)

Standards and regulations

Testing

Standards/regulations	PC: Fire protection in rail vehicles - requirement sets R22, R23, and R24 acc. to DIN EN 45545-2 (Risk level HL1 - HL3)

Drawings

Dimensional drawing

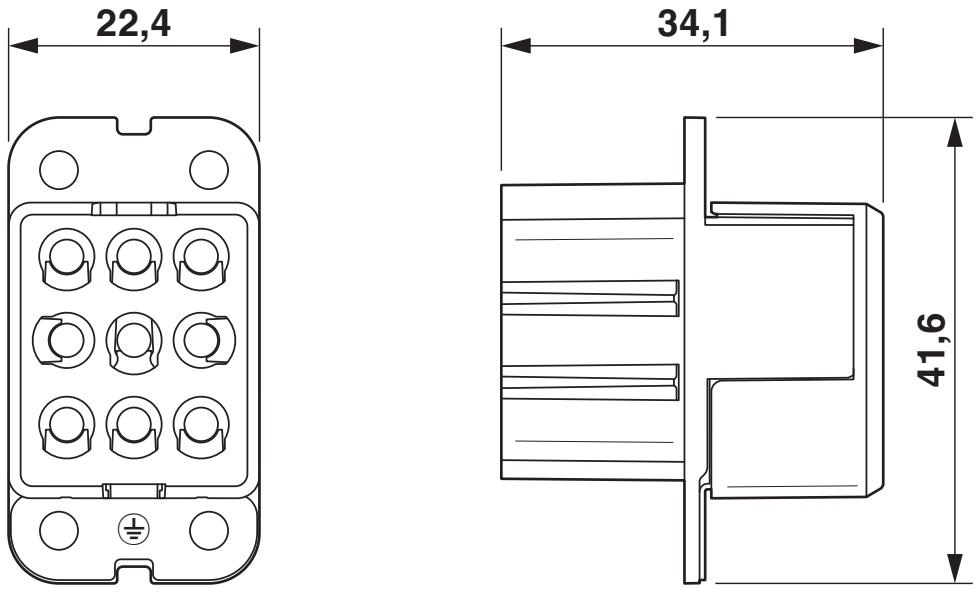

Dimensional drawing

Diagram

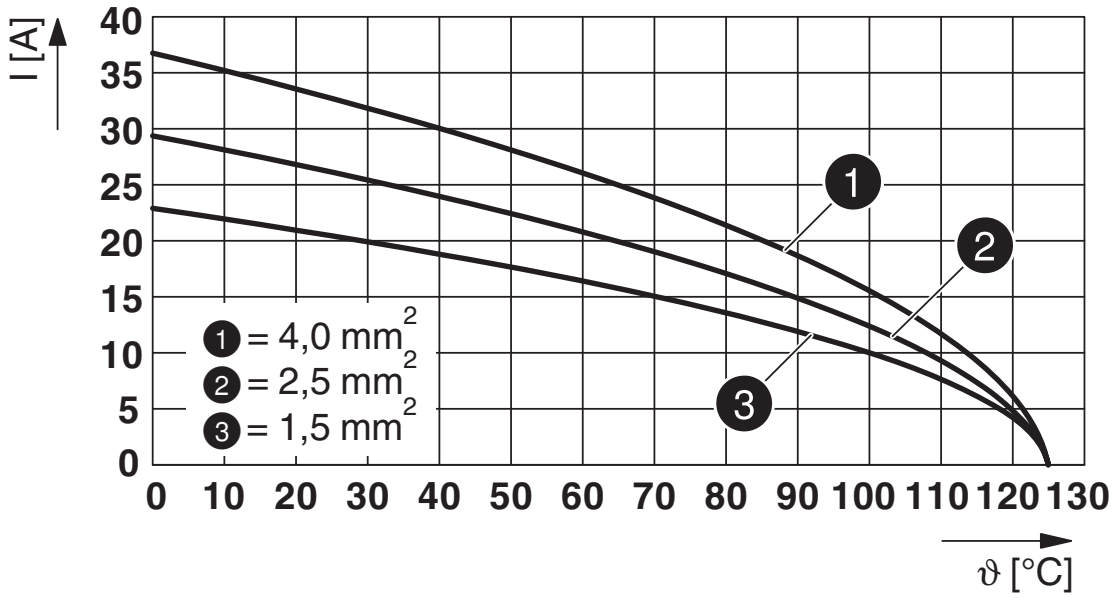

Derating diagram

Schematic diagram

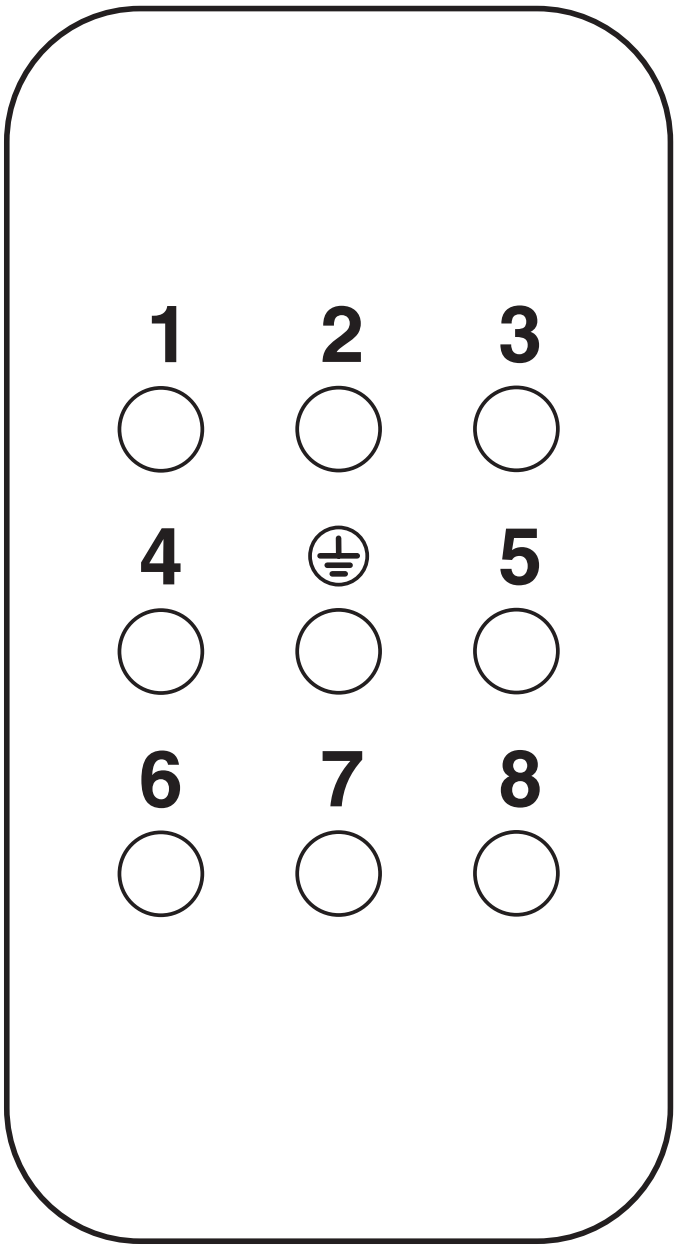

Connector pin assignment, connection side

Approvals

To download certificates, visit the product detail page: https://www.phoenixcontact.com/us/products/1079547

EAC
Approval ID: RU C-DE.BL08.B.00511

UL Recognized
Approval ID: E468743

	Nominal voltage U_N	Nominal current I_N	Cross section AWG	Cross section mm^2
	600 V	24 A	- 12	-

Classifications

ECLASS

ECLASS-11.0	27440205
ECLASS-12.0	27440205
ECLASS-13.0	27440205

ETIM

ETIM 9.0	EC000438

UNSPSC

UNSPSC 21.0	39121500

Environmental product compliance

EU RoHS

Fulfills EU RoHS substance requirements	Yes, No exemptions

China RoHS

Environment friendly use period (EFUP)	EFUP-E
	No hazardous substances above the limits

EU REACH SVHC

REACH candidate substance (CAS No.)	No substance above 0.1 wt%

Accessories

CP-HC-S - Coding profile

1410916

https://www.phoenixcontact.com/us/products/1410916

Coding profile, for contact inserts HC-BB... / HC-A10... / HC-A16...



HC-CP-CK2.5-PL - Coding element

1095419

https://www.phoenixcontact.com/us/products/1095419

Dummy socket for contact carrier with turned CK 2,5-ED... socket contacts. For HC-A../HC-BB.../HC-M... series contact inserts.



CK2,5-ED-0,50BU AG - Crimp contact

1663640

https://www.phoenixcontact.com/us/products/1663640



Crimp contact, contact diameter: 2.5 mm, turned, Socket, contact material: Copper alloy, contact surface: silver-plated, connection cross section: 0.5 mm^2 ... 0.5 mm^2, AWG 20

CK2,5-ED-0,75BU AG - Crimp contact

1663653

https://www.phoenixcontact.com/us/products/1663653



Crimp contact, contact diameter: 2.5 mm, turned, Socket, contact material: Copper alloy, contact surface: silver-plated, connection cross section: 0.75 mm^2 ... 0.75 mm^2, AWG 18

CK2,5-ED-1,00BU AG - Crimp contact

1663666

https://www.phoenixcontact.com/us/products/1663666



Crimp contact, contact diameter: 2.5 mm, turned, Socket, contact material: Copper alloy, contact surface: silver-plated, connection cross section: 0.75 mm^2 ... 1 mm^2, AWG 18

CK2,5-ED-1,50BU AG - Crimp contact

1663679

https://www.phoenixcontact.com/us/products/1663679



Crimp contact, contact diameter: 2.5 mm, turned, Socket, contact material: Copper alloy, contact surface: silver-plated, connection cross section: 1.5 mm^2 ... 1.5 mm^2, AWG 16

CK2,5-ED-2,50BU AG - Crimp contact

1663682

https://www.phoenixcontact.com/us/products/1663682



Crimp contact, contact diameter: 2.5 mm, turned, Socket, contact material: Copper alloy, contact surface: silver-plated, connection cross section: 2.5 mm^2 ... 2.5 mm^2, AWG 14

CK2,5-ED-3,00BU AG - Crimp contact

1663695

https://www.phoenixcontact.com/us/products/1663695



Crimp contact, contact diameter: 2.5 mm, turned, Socket, contact material: Copper alloy, contact surface: silver-plated, connection cross section: 3 mm^2 ... 3 mm^2, AWG 12

CK2,5-ED-4,00BU AG - Crimp contact

1663705

https://www.phoenixcontact.com/us/products/1663705



Crimp contact, contact diameter: 2.5 mm, turned, Socket, contact material: Copper alloy, contact surface: silver-plated, connection cross section: 4 mm^2 ... 4 mm^2, AWG 12

CK2,5-ED-0,50F AG - Crimp contact

1273612

https://www.phoenixcontact.com/us/products/1273612



Crimp contact, contact diameter: 2.5 mm, turned, Socket, contact material: Copper alloy, lead-free, contact surface: silver-plated, connection cross section: 0.5 mm^2 ... 0.5 mm^2, AWG 20

CK2,5-ED-0,75F AG - Crimp contact

1273611

https://www.phoenixcontact.com/us/products/1273611



Crimp contact, contact diameter: 2.5 mm, turned, Socket, contact material: Copper alloy, lead-free, contact surface: silver-plated, connection cross section: 0.75 mm^2 ... 0.75 mm^2, AWG 18

CK2,5-ED-1,00F AG - Crimp contact

1273610

https://www.phoenixcontact.com/us/products/1273610



Crimp contact, contact diameter: 2.5 mm, turned, Socket, contact material: Copper alloy, lead-free, contact surface: silver-plated, connection cross section: 1 mm^2 ... 1 mm^2, AWG 18

CK2,5-ED-1,50F AG - Crimp contact

1273609

https://www.phoenixcontact.com/us/products/1273609



Crimp contact, contact diameter: 2.5 mm, turned, Socket, contact material: Copper alloy, lead-free, contact surface: silver-plated, connection cross section: 1.5 mm^2 ... 1.5 mm^2, AWG 16

CK2,5-ED-2,50F AG - Crimp contact

1273607

https://www.phoenixcontact.com/us/products/1273607



Crimp contact, contact diameter: 2.5 mm, turned, Socket, contact material: Copper alloy, lead-free, contact surface: silver-plated, connection cross section: 2.5 mm^2 ... 2.5 mm^2, AWG 14

CK2,5-ED-3,00F AG - Crimp contact

1273606

https://www.phoenixcontact.com/us/products/1273606



Crimp contact, contact diameter: 2.5 mm, turned, Socket, contact material: Copper alloy, lead-free, contact surface: silver-plated, connection cross section: 3 mm^2 ... 3 mm^2, AWG 12

CK2,5-ED-4,00F AG - Crimp contact

1273604

https://www.phoenixcontact.com/us/products/1273604



Crimp contact, contact diameter: 2.5 mm, turned, Socket, contact material: Copper alloy, lead-free, contact surface: silver-plated, connection cross section: 4 mm^2 ... 4 mm^2, AWG 12

CK2,5-ED-0,37BU AU - Crimp contact

1585647

https://www.phoenixcontact.com/us/products/1585647



Crimp contact, contact diameter: 2.5 mm, turned, Socket, contact material: Copper alloy, contact surface: gold-plated, connection cross section: 0.14 mm^2 ... 0.37 mm^2, AWG 22 ... 26

CK2,5-ED-0,50BU AU - Crimp contact

1674859

https://www.phoenixcontact.com/us/products/1674859



Crimp contact, contact diameter: 2.5 mm, turned, Socket, contact material: Copper alloy, contact surface: gold-plated, connection cross section: 0.5 mm^2 ... 0.5 mm^2, AWG 20

CK2,5-ED-1,00BU AU - Crimp contact

1674833

https://www.phoenixcontact.com/us/products/1674833



Crimp contact, contact diameter: 2.5 mm, turned, Socket, contact material: Copper alloy, contact surface: gold-plated, connection cross section: 0.75 mm^2 ... 1 mm^2, AWG 18

CK2,5-ED-1,50BU AU - Crimp contact

1674820

https://www.phoenixcontact.com/us/products/1674820



Crimp contact, contact diameter: 2.5 mm, turned, Socket, contact material: Copper alloy, contact surface: gold-plated, connection cross section: 1.5 mm^2 ... 1.5 mm^2, AWG 16

CK2,5-ED-2,50BU AU - Crimp contact

1674862

https://www.phoenixcontact.com/us/products/1674862



Crimp contact, contact diameter: 2.5 mm, turned, Socket, contact material: Copper alloy, contact surface: gold-plated, connection cross section: 2.5 mm^2 ... 2.5 mm^2, AWG 14

CK2,5-ED-4,00BU AU - Crimp contact

1674846

https://www.phoenixcontact.com/us/products/1674846



Crimp contact, contact diameter: 2.5 mm, turned, Socket, contact material: Copper alloy, contact surface: gold-plated, connection cross section: 4 mm^2 ... 4 mm^2, AWG 12

CK2,5-ED-0,37F AU - Crimp contact

1273567

https://www.phoenixcontact.com/us/products/1273567



Crimp contact, contact diameter: 2.5 mm, turned, Socket, contact material: Copper alloy, lead-free, contact surface: gold-plated, connection cross section: 0.14 mm^2 ... 0.37 mm^2, AWG 22 ... 26

CK2,5-ED-0,50F AU - Crimp contact

1273564

https://www.phoenixcontact.com/us/products/1273564



Crimp contact, contact diameter: 2.5 mm, turned, Socket, contact material: Copper alloy, lead-free, contact surface: gold-plated, connection cross section: 0.5 mm^2 ... 0.5 mm^2, AWG 20

CK2,5-ED-1,00F AU - Crimp contact

1271379

https://www.phoenixcontact.com/us/products/1271379



Crimp contact, contact diameter: 2.5 mm, turned, Socket, contact material: Copper alloy, lead-free, contact surface: gold-plated, connection cross section: 1 mm^2 ... 1 mm^2, AWG 18

CK2,5-ED-1,50F AU - Crimp contact

1271375

https://www.phoenixcontact.com/us/products/1271375



Crimp contact, contact diameter: 2.5 mm, turned, Socket, contact material: Copper alloy, lead-free, contact surface: gold-plated, connection cross section: 1.5 mm^2 ... 1.5 mm^2, AWG 16

CK2,5-ED-2,50F AU - Crimp contact

1271376

https://www.phoenixcontact.com/us/products/1271376



Crimp contact, contact diameter: 2.5 mm, turned, Socket, contact material: Copper alloy, lead-free, contact surface: gold-plated, connection cross section: 2.5 mm^2 ... 2.5 mm^2, AWG 14

CK2,5-ED-4,00F AU - Crimp contact

1271372

https://www.phoenixcontact.com/us/products/1271372



Crimp contact, contact diameter: 2.5 mm, turned, Socket, contact material: Copper alloy, lead-free, contact surface: gold-plated, connection cross section: 4 mm^2 ... 4 mm^2, AWG 12

HC-COM-Q08-I-CT-F - Contact insert

1079547

https://www.phoenixcontact.com/us/products/1079547

HC-COM-Q08-I-CT-M - Contact insert

1079548

https://www.phoenixcontact.com/us/products/1079548



Contact insert, number of positions: 8+PE, size: COM, power contacts: 8, control contacts: 0, number of connections per position: 1, Pin, Crimp connection, 320 V, 16 A, 0.5 mm^2 ... 4 mm^2, application: Power

UNIFOX MT-CK 1.6/2.5 - Assembly tool

1089092

https://www.phoenixcontact.com/us/products/1089092



Assembly tool, for CK 1.6... crimp contacts for small conductor cross sections

HC-COM-Q08-I-CT-F - Contact insert

1079547

https://www.phoenixcontact.com/us/products/1079547

UNIFOX RT-CK 2.5 - Contact removal tool

1072067

https://www.phoenixcontact.com/us/products/1072067



Contact removal tool, for turned CK 2,5... contacts

Phoenix Contact 2024 © - all rights reserved
https://www.phoenixcontact.com

Phoenix Contact USA
586 Fulling Mill Road
Middletown, PA 17057, United States
(+717) 944-1300
info@phoenixcon.com