EV7748S-F-00A

2.1 Channels SE and BTL Class D Audio Amplifier Evaluation Board

DESCRIPTION

The EV7748S-F-00A is the 2.1 channels configuration evaluation board for the MP7748S, a 30W Single-ended or 60W Mono Class D Audio Amplifier. It is one of MPS' products of fully integrated audio amplifiers which dramatically reduce solution size by integrating the following:

- 250mΩ power MOSFETs
- Startup / Shutdown pop elimination
- Short circuit protection circuits

The MP7748S utilizes Single-ended structure Bridge Tied Load output structure capable of delivering 60W into 8Ω speakers. MPS Class D Audio Amplifiers exhibit the high fidelity of a Class A/B amplifier at high efficiency. The circuit is based on the MPS' AAM™ proprietary variable frequency topology that delivers excellent linearity, fast response time and operates on a single power supply.

FEATURES

- 30W Stereo Single-ended Output at V_{DD} = 30V into 4Ω loads
- 60W BTL Output at V_{DD} = 30V into a 8Ω load
- THD+N = 0.02% at 1W, 8Ω, 1kHz, SE and BTL, VDD = 24V
- 93% Efficiency at 40W and V_{DD}=24V with 8Ω load, BTL; 2 x 10W and V_{DD} = 24V with 8Ω load, Single-ended
- Low Noise (150μV Typical)
- 9.5V to 36V Operation from a Single Supply

APPLICATIONS

- Flat Panel TV
- Portable Docking Stations
- Surround Sound DVD Systems
- Televisions
- Multimedia Computers
- Home Stereo Systems

ELECTRICAL SPECIFICATIONS

Parameter	Symbol	Value	Units
Supply Voltage	V_{DD}	9.5~36	V

All MPS parts are lead-free and adhere to the RoHS directive. For MPS green status, please visit MPS website under Quality Assurance. "MPS" and "The Future of Analog IC Technology" are Registered Trademarks of Monolithic Power Systems, Inc.

EV7748S-F-00A EVALUATION BOARD

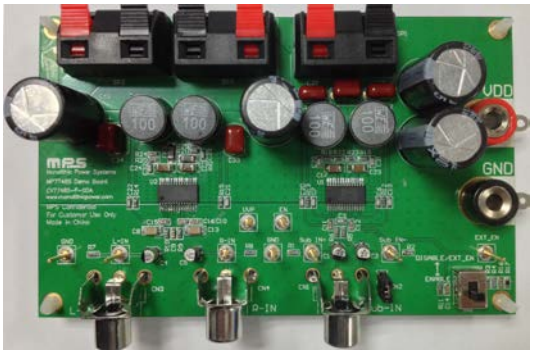

(L x W x H) 4.52" x 2.8" x 1.26"
11.5cm x 7.2cm x 3.2cm

Board Number	MPS IC Number
EV7748S-F-00A	MP7748SDF

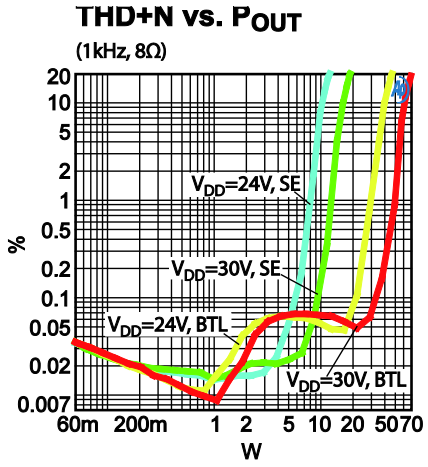

MPS Proprietary Information. Patent Protected. Unauthorized Photocopy and Duplication Prohibited.
© 2014 MPS. All Rights Reserved.

EVALUATION BOARD SCHEMATIC

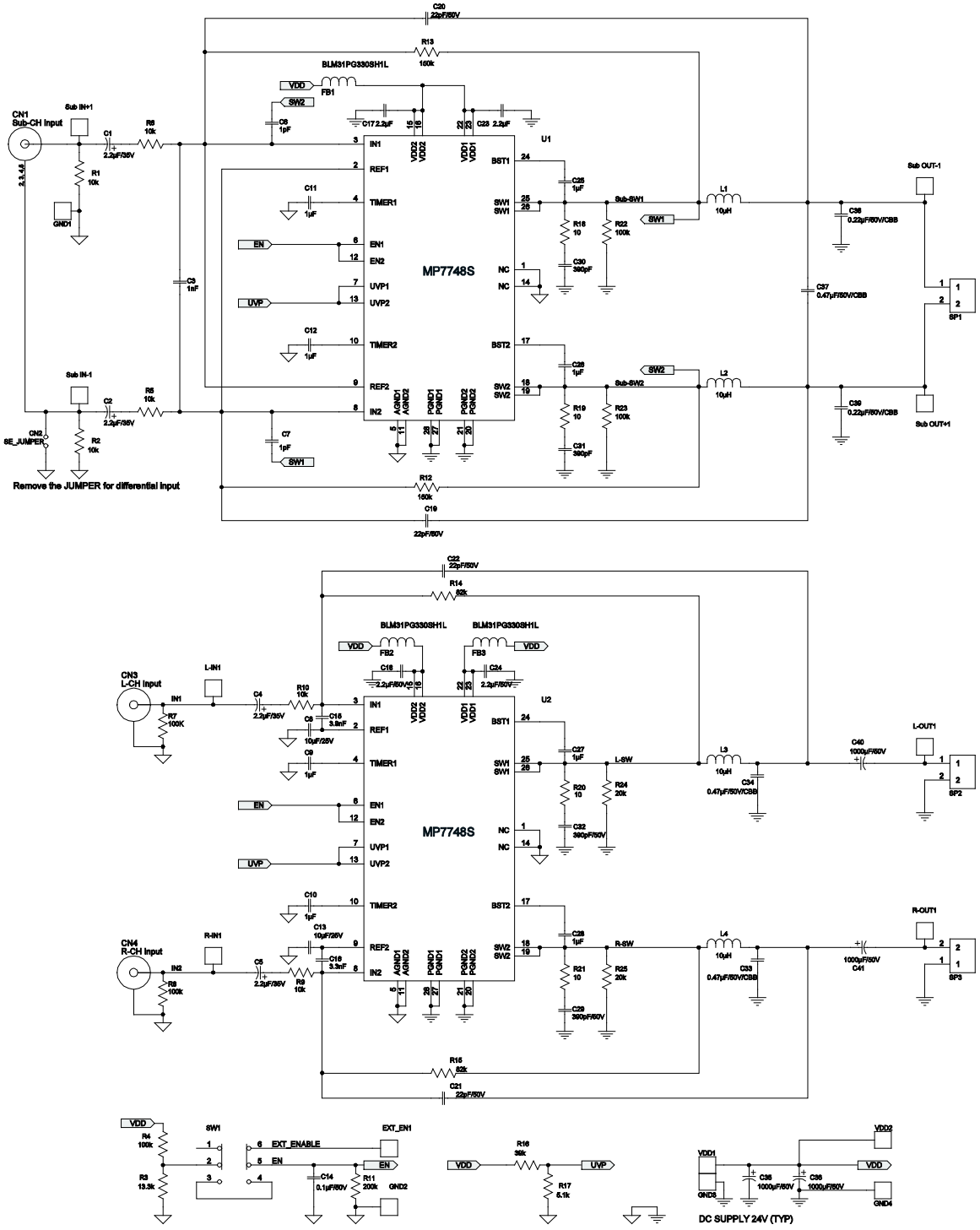

MPS Proprietary Information. Patent Protected. Unauthorized Photocopy and Duplication Prohibited.
© 2014 MPS. All Rights Reserved.

EV7748S-F-00A BILL OF MATERIALS

Qty	Ref	Value	Description	Package	Manufacturer	Manufacturer P/N
4	C1, C2, C4, C5	2.2μF	Electrolytic Capacitor; 35V;Electrolytic	.	Panasonic	ECEV1VS2R2SR
1	C3	1nF	Ceramic Capacitor; 50V;C0G;0603;	0603	muRata	GRM1885C1H102JA01D
2	C6, C7	1pF	Ceramic Capacitor; 50V;C0G;0603	0603	TDK	C1608C0G1H010C
2	C8, C13	10μF	Ceramic Capacitor; 25V;X5R;1206;	1206	muRata	GRM31CR61E106KA12L
8	C9, C10, C11, C12, C25, C26, C27, C28	1μF	Ceramic Capacitor; 10V;X7R	0603	Murata	GRM188R71A105KA61D
1	C14	0.1μF	Ceramic Capacitor; 50V;X7R;0603	0603	muRata	GRM188R71H104KA93D
1	C15	3.9nF	Ceramic Capacitor; 50V;X7R;0603;	0603	TDK	C1608X7R1H392K
1	C16	3.3nF	Ceramic Capacitor; 50V;X7R;0603	0603	TDK	C1608X7R1H332K
4	C18, C17, C23,C24	2.2μF	Ceramic Capacitor; 50V;X7R;1206	1206	muRata	GRM31CR71H225KA88L
4	C19, C20, C21, C22	22pF	Ceramic Capacitor; 50V;C0G;0603	0603	TDK	C1608C0G1H220J
4	C29, C32, C30, C31	390pF	Ceramic Capacitor; 50V;C0G;0603	0603	TDK	C1608C0G1H391J
3	C33, C34, C37	0.47μF	Capacitor;50V;CBB	DIP	Panasonic	ECQV1H474JL
2	C35, C36, C40, C41	1000μF	Electrolytic Capacitor; 50V;Electrolytic	DIP	Rubycon	1000μF/50V
2	C38, C39	0.22μF	Capacitor;50V;CBB	DIP	Panasonic	ECQV1H224JL
6	R1, R2, R5, R6, R9, R10	10k	Film Resistor;1%, Resistor;1%	0603	Yageo	RC0603FR-0710KL
1	R3	13.3k	Film Resistor;1%	0603	Yageo	RC0603FR-0713K3L
5	R4, R7, R8, R22, R23	100k	Film Resistor;1%, Film Resistor;1%;	0603	Yageo	RC0603FR-07100KL
1	R11	200k	Film Resistor;1%	0603	Yageo	RC0603FR-07200KL
2	R12, R13	150k	Film Resistor;1%	0603	Yageo	RC0603FR-07150KL
2	R14, R15	82k	Film Resistor;1%	0603	Yageo	RC0603FR-0782KL
1	R16	39k	Film Resistor;1%;	0603	Yageo	RC0603FR-0739KL
1	R17	5.1k	Film Resistor;1%;	0603	Yageo	RC0603FR-075K1L
4	R18, R19, R20, R21	10	Film Resistor;1%	0603	Yageo	RC0603FR-0710RL
2	R24, R25	20k	Film Resistor;1%;1/10W;	0603	Yageo	RC0603FR-0720KL
3	FB1, FB2, FB3	BLM31PG330SH1L	Magnetic Bead;6A	1206	Murata	BLM31PG330SH1L
4	L1, L2, L3, L4	10μH	Inductor;10uH;22mOhm;5.1A	DIP	Wurth	7447471100

MPS Proprietary Information. Patent Protected. Unauthorized Photocopy and Duplication Prohibited.
© 2014 MPS. All Rights Reserved.

EV7748S-F-00A BILL OF MATERIALS *(continued)*

Qty	Ref	Value	Description	Package	Manufacturer	Manufacturer P/N
1	CN2		Connector 2Pin 2.54mm	DIP		
3	CN1,CN3, CN4		Connector, RCA Jack, R/A	DIP		
3	SP1,SP2		Speaker Connector	DIP		
1	SW1		DPDT Switch	DIP		S202031MS02Q
9	GND, GND, L-IN1, R-IN1, Sub IN+1, Sub IN-1, UVP,EN,EXT_EN		Connector;1.0mm gold plated	DIP		
2	GND/VDD		Connector;Black			
2	U1,U2	MP7748S	MP7748/TSSOP28/EP	TSSOP28/EP	MPS	MP7748S

MPS Proprietary Information. Patent Protected. Unauthorized Photocopy and Duplication Prohibited.
© 2014 MPS. All Rights Reserved.

PRINTED CIRCUIT BOARD LAYOUT

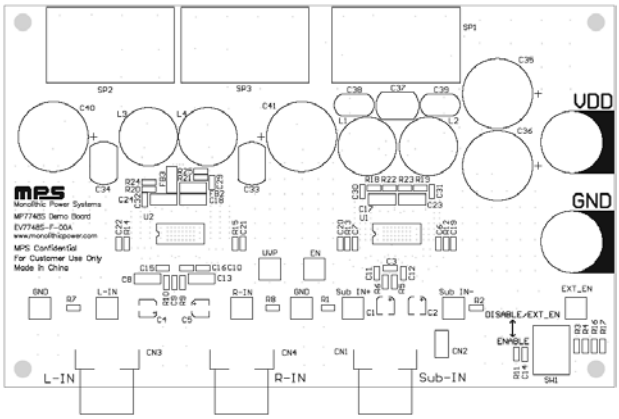

Figure 1—Top Silk Layer

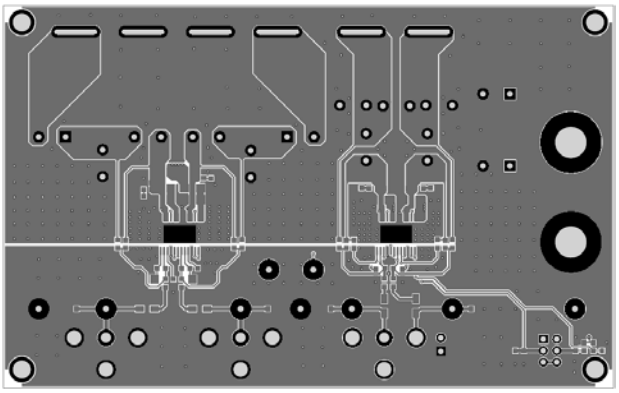

Figure 2—Top Layer

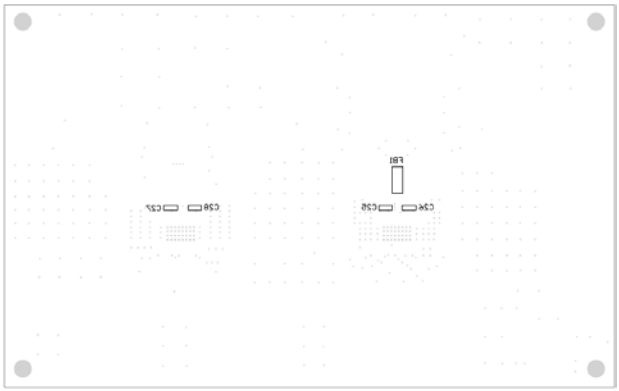

Figure 3—Bottom Silk Layer

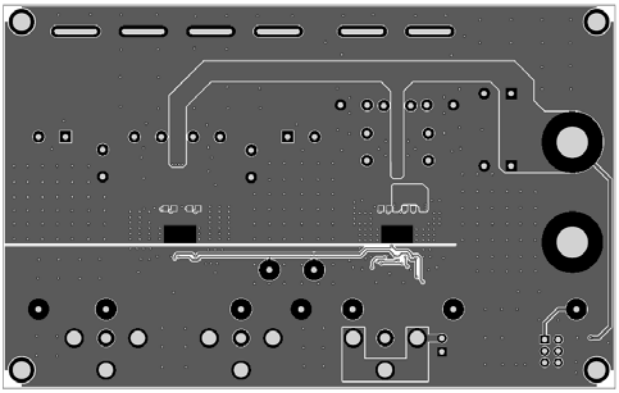

Figure 4—Bottom Layer

MPS Proprietary Information. Patent Protected. Unauthorized Photocopy and Duplication Prohibited.
© 2014 MPS. All Rights Reserved.

QUICK START GUIDE

This board is set up from the factory for 24V BTL operation. To use with 30V (12V) power supply, adjust the components as specified in the 30V (12V) Operation Modifications section below. To use differential input, remove the jumper CN2. For more information, consult the MP7748S datasheet.

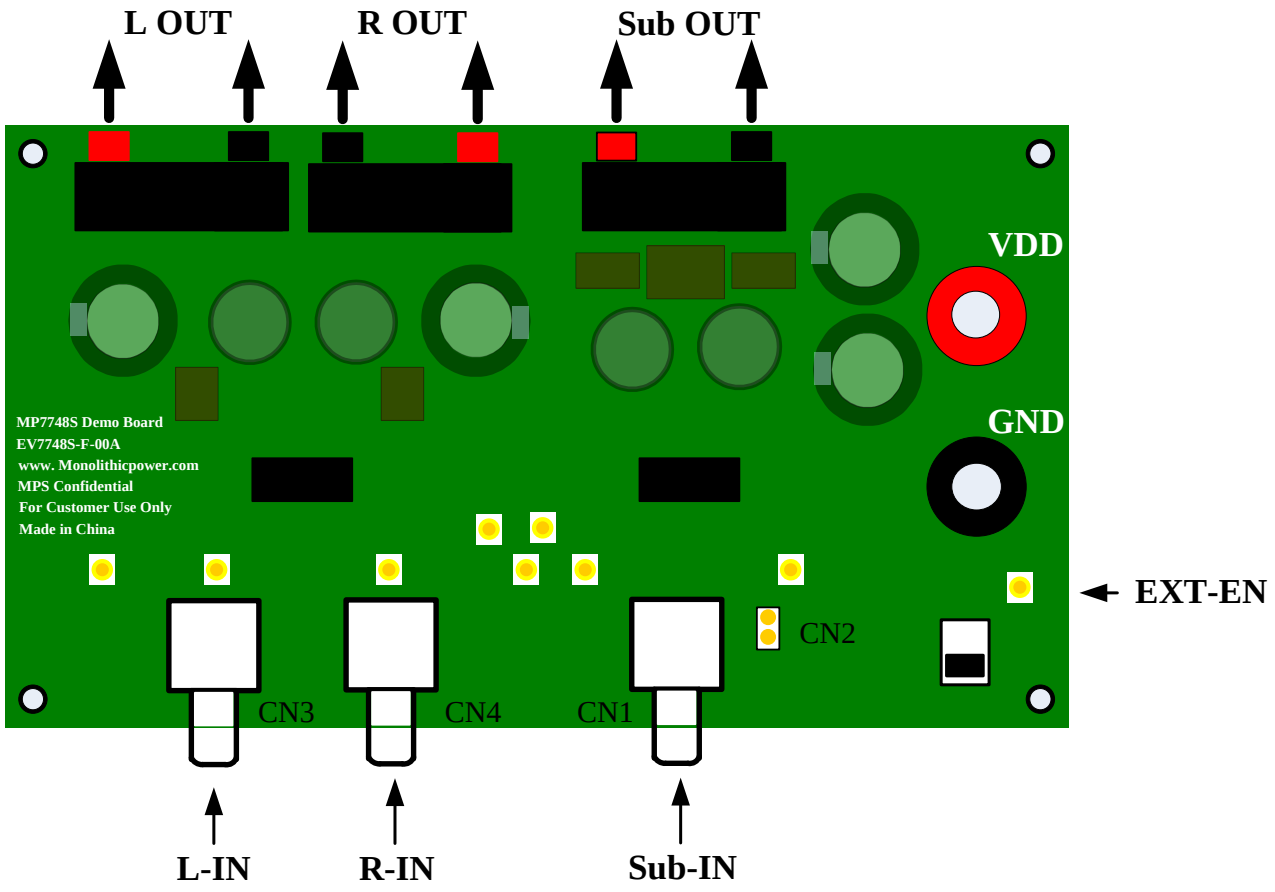

Figure 5—EV7748-F-00A Connection Diagram

1. Power Requirements
    a. Power supply: 9.5V to 36V, 4.5A maximum.
    b. 0V to 2VRMS (max) audio signal source.
    c. Speaker: typically 6Ω to 8Ω;
2. Setup Condition for 24V Operation
    a. Adjust the power supply to 24V (do not turn on).
    b. Connect the outputs to the external speakers.
    c. Connect the power supply to the VDD terminals.
    d. Set the enable switch to the DISABLE position.
    e. Connect the audio input signal source to the amplifier input.
    f. Turn on the power supply.

MPS Proprietary Information. Patent Protected. Unauthorized Photocopy and Duplication Prohibited.
© 2014 MPS. All Rights Reserved.

3. 30V Operation Modifications (minimum resistance load is 8 Ω)
    a. Refer to MP7748S Data Sheet Table 2 for frequency optimization.
    b. Change R16 to 56k to set 26V VDD shut down voltage.
    c. Adjust the power supply to 30V (do not turn on).
    d. Do as step b~f specified in Section 2.
4. 12V Operation Modifications
    a. Refer to MP7748S Data Sheet Table 2 for frequency optimization
    b. Change R16 to 15kΩ to set 9V VDD shutdown voltage.
    c. Change R4 to 24.9k, so that can make sure EN signal is high enough @ 12V VDD.
    d. Adjust the power supply to 12V (do not turn on).
    e. Do as step b~f specified in Section 2.
5. Music Turn-On Sequence
    Set the enable switch to the ENABLE position.
6. Music Turn-Off Sequence
    a. Set the enable switch to the DISABLE position.
    b. Turn off the power supply.

NOTICE: The information in this document is subject to change without notice. Please contact MPS for current specifications. Users should warrant and guarantee that third party Intellectual Property rights are not infringed upon when integrating MPS products into any application. MPS will not assume any legal responsibility for any said applications.

MPS Proprietary Information. Patent Protected. Unauthorized Photocopy and Duplication Prohibited.
© 2014 MPS. All Rights Reserved.