THIS DRAWING IS UNPUBLISHED. RELEASED FOR PUBLICATION –,– .
© COPYRIGHT – By – ALL RIGHTS RESERVED.

LOC	DIST
AF	50

REVISIONS

P	LTR	DESCRIPTION	DATE	DWN	APVD
	F1	ECR-13-017177	05NOV13	PKS	RRP

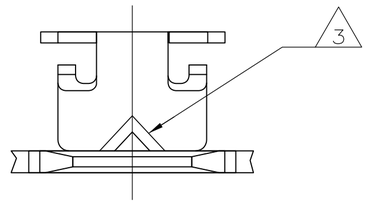

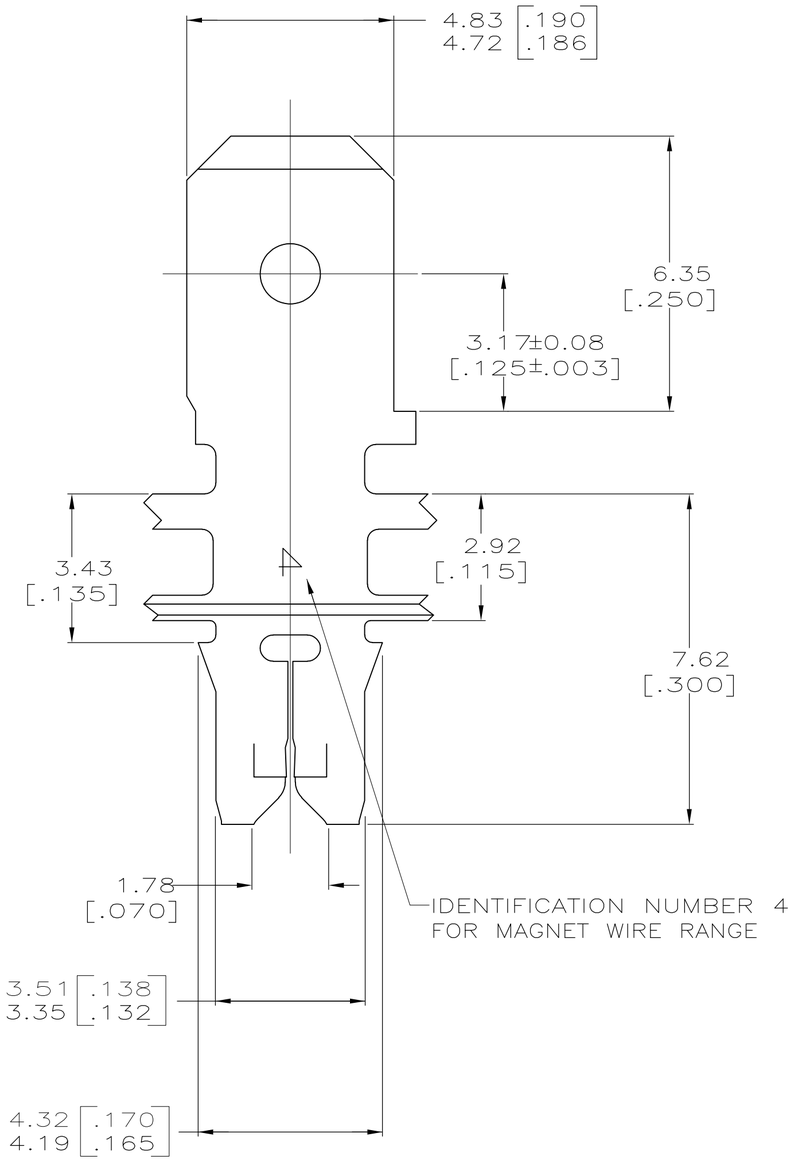

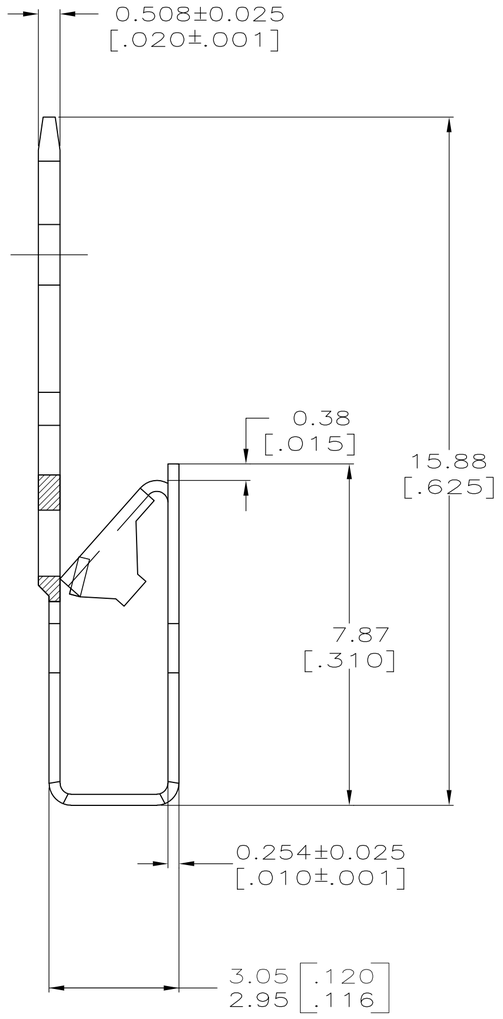

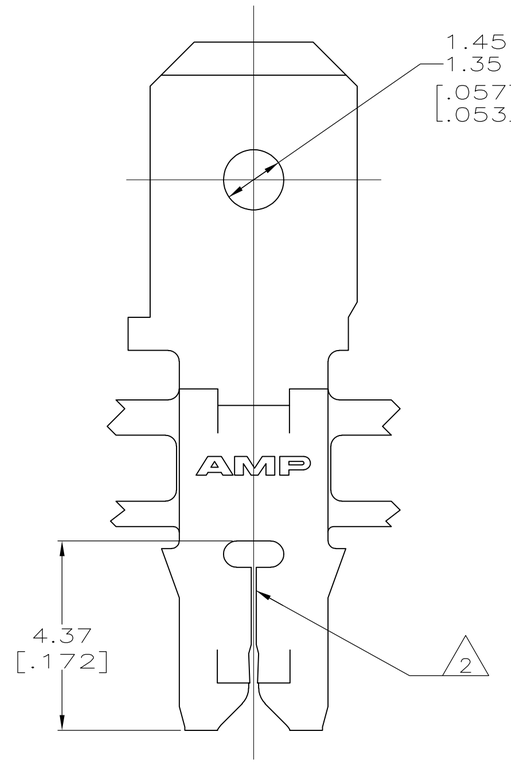

1 CONTINUOUS STRIP ON REELS WITH TERMINALS LOCATED ON 5.59±0.08 [.220±.003] CENTERS. SLOT ACCEPTS A SINGLE WIRE MAX OF 0.18–0.23mm [#33–#31] AWG COPPER MAGNET WIRE.

△2 POKE-IN ACCEPTS A 0.5–0.8mm² [#20–#18] AWG SOLID OR FUSED STRANDED LEAD WIRE.

△3 AFTER INSERTION INTO PLASTIC HOLDER TAB TO 90° OR PORTION MUST BE BENT OVER 45°.

4 POTTED-IN TO PREVENT PULL-OUT WHEN MATING RECEPTACLE IS DISCONNECTED.

63018

63018-1

THIS DRAWING IS A CONTROLLED DOCUMENT.

DIMENSIONS: INCHES

TOLERANCES UNLESS OTHERWISE SPECIFIED:
0 PLC ± –
1 PLC ± –
2 PLC ± 0.25 [.010]
3 PLC ± –
4 PLC ± –
ANGLES ± –

MATERIAL: BRASS
FINISH: TIN PLATED

DWN RAY. R. B JR. 4-12-94
CHK MICHAEL S. FEHER 4-22-94
APVD NELSON E NEFF 4-27-94
PRODUCT SPEC 108-2012
APPLICATION SPEC 114-2046
WEIGHT –

TE Connectivity

NAME: TERMINAL, TAB, POKE-IN/4.75 [.187] FASTON,™ COMBINATION, MAG-MATE™

SIZE	CAGE CODE	DRAWING NO	RESTRICTED TO
A2	00779	C-63018	–

CUSTOMER DRAWING | SCALE 10:1 | SHEET 1 OF 1 | REV F1