PTS 1,5/12-PH-5,0 CLIP - PCB connectors

1848639

https://www.phoenixcontact.com/us/products/1848639

Please be informed that the data shown in this PDF document is generated from our online catalog. Please find the complete data in the user documentation. Our general terms of use for downloads are valid.



PCB connector, nominal cross section: 1.5 mm^2, color: green, nominal current: 10 A, rated voltage (III/2): 400 V, contact surface: Tin, contact connection type: Socket, number of potentials: 12, number of rows: 1, number of positions: 12, number of connections: 12, product range: PTS 1,5/..-PH CLIP, pitch: 5 mm, connection method: Push-in spring connection, conductor/PCB connection direction: 0 °, plug-in system: COMBICON PST 1,3, locking: without, type of packaging: packed in cardboard

Your advantages

- Time saving push-in connection, tools not required
- Defined contact force ensures that contact remains stable over the long term
- Intuitive operation due to color-coded actuating push button
- Can be snapped into device housing thanks to CLIP geometry
- Largest possible clamping space in a small component size

Commercial data

Item number	1848639
Packing unit	50 pc
Minimum order quantity	50 pc
Note	Made to order (non-returnable)
Sales key	AA02
Product key	AABFRB
GTIN	4055626282404
Weight per piece (including packing)	8.52 g
Weight per piece (excluding packing)	8.52 g
Customs tariff number	85366990
Country of origin	BG

Technical data

Product properties

Product type	PCB connector
Product family	PTS 1,5/..-PH CLIP
Product line	COMBICON Connectors S
Number of positions	12
Pitch	5 mm
Number of connections	12
Number of rows	1
Number of potentials	12

Electrical properties

Nominal current I_N	10 A
Nominal voltage U_N	400 V
Contact resistance	1.6 mΩ
Rated voltage (III/3)	250 V
Rated surge voltage (III/3)	4 kV
Rated voltage (III/2)	400 V
Rated surge voltage (III/2)	4 kV
Rated voltage (II/2)	630 V
Rated surge voltage (II/2)	4 kV

Connection data

Connection technology

Connector system	COMBICON PST 1,3
Nominal cross section	1.5 mm²
Contact connection type	Socket

Interlock

Locking type	without

Conductor connection

Connection method	Push-in spring connection
Conductor/PCB connection direction	0 °
Conductor cross section rigid	0.2 mm² ... 2.5 mm²
Conductor cross section flexible	0.2 mm² ... 2.5 mm²
Conductor cross section AWG	26 ... 14
Conductor cross section flexible, with ferrule without plastic sleeve	0.25 mm² ... 1.5 mm²
Conductor cross section, flexible, with ferrule, with plastic sleeve	0.25 mm² ... 1.5 mm²
Stripping length	8 mm

Material specifications

Material data - contact

Note	WEEE/RoHS-compliant, free of whiskers according to IEC 60068-2-82/JEDEC JESD 201
Contact material	Cu alloy
Surface characteristics	hot-dip tin-plated
Metal surface terminal point (top layer)	Tin (4 - 8 µm Sn)
Metal surface contact area (top layer)	Tin (4 - 8 µm Sn)

Material data - housing

Color (Housing)	green (6021)
Insulating material	PA
Insulating material group	I
CTI according to IEC 60112	600
Flammability rating according to UL 94	V0
Glow wire flammability index GWFI according to EN 60695-2-12	850
Glow wire ignition temperature GWIT according to EN 60695-2-13	775
Temperature for the ball pressure test according to EN 60695-10-2	125 °C

Material data – actuating element

Color (Actuating element)	orange (2003)
Insulating material	PA
Insulating material group	I
CTI according to IEC 60112	600
Flammability rating according to UL 94	V0
Glow wire flammability index GWFI according to EN 60695-2-12	850
Glow wire ignition temperature GWIT according to EN 60695-2-13	775
Temperature for the ball pressure test according to EN 60695-10-2	125 °C

Dimensions

Dimensional drawing	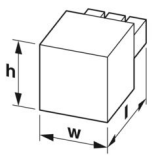
Pitch	5 mm
Width [w]	60 mm
Height [h]	14.25 mm
Length [l]	15.21 mm

Mechanical tests

Conductor connection

Specification	IEC 60999-1:1999-11
Result	Test passed

Test for conductor damage and slackening

Specification	IEC 60999-1:1999-11
Result	Test passed

Repeated connection and disconnection

Specification	IEC 60999-1:1999-11
Result	Test passed

Pull-out test

Specification	IEC 60999-1:1999-11
Conductor cross section/conductor type/tractive force setpoint/actual value	0.2 mm² / solid / > 10 N
	0.2 mm² / flexible / > 10 N
	2.5 mm² / solid / > 50 N
	2.5 mm² / flexible / > 50 N

Insertion and withdrawal forces

Result	Test passed
No. of cycles	25
Insertion strength per pos. approx.	5 N
Withdraw strength per pos. approx.	5 N

Resistance of inscriptions

Specification	IEC 60068-2-70:1995-12
Result	Test passed

Visual inspection

Specification	IEC 60512-1-1:2002-02
Result	Test passed

Dimension check

Specification	IEC 60512-1-2:2002-02
Result	Test passed

Environmental and real-life conditions

Vibration test

Specification	IEC 60068-2-6:2007-12
Frequency	10 - 150 - 10 Hz
Sweep speed	1 octave/min
Amplitude	0.35 mm (10 Hz ... 60.1 Hz)
Acceleration	5g (60.1 Hz ... 150 Hz)
Test duration per axis	2.5 h

Durability test

Specification	IEC 60512-9-1:2010-03

Impulse withstand voltage at sea level	4.8 kV
Contact resistance R_1	1.6 mΩ
Contact resistance R_2	1.7 mΩ
Insertion/withdrawal cycles	25
Insulation resistance, neighboring positions	> 5 MΩ

Climatic test

Specification	ISO 6988:1985-02
Corrosive stress	0.2 dm^3 SO_2 on 300 dm^3/40 °C/1 cycle
Thermal stress	100 °C/168 h
Power-frequency withstand voltage	2.21 kV

Ambient conditions

Ambient temperature (operation)	-40 °C ... 100 °C (dependent on the derating curve)
Ambient temperature (storage/transport)	-40 °C ... 70 °C
Relative humidity (storage/transport)	30 % ... 70 %
Ambient temperature (assembly)	-5 °C ... 100 °C

Electrical tests

Thermal test | Test group C

Specification	IEC 60512-5-1:2002-02
Tested number of positions	12

Insulation resistance

Specification	IEC 60512-3-1:2002-02
Insulation resistance, neighboring positions	> 5 MΩ

Temperature cycles

Specification	IEC 60999-1:1999-11
Result	Test passed

Air clearances and creepage distances |

Specification	IEC 60664-1:2007-04
Insulating material group	I
Comparative tracking index (IEC 60112)	CTI 600
Rated insulation voltage (III/3)	250 V
Rated surge voltage (III/3)	4 kV
minimum clearance value - non-homogenous field (III/3)	3 mm
minimum creepage distance (III/3)	3.2 mm
Rated insulation voltage (III/2)	400 V
Rated surge voltage (III/2)	4 kV
minimum clearance value - non-homogenous field (III/2)	3 mm
minimum creepage distance (III/2)	3 mm
Rated insulation voltage (II/2)	630 V
Rated surge voltage (II/2)	4 kV
minimum clearance value - non-homogenous field (II/2)	3 mm

minimum creepage distance (II/2)	3.2 mm

Packaging specifications

Type of packaging	packed in cardboard

Drawings

Diagram

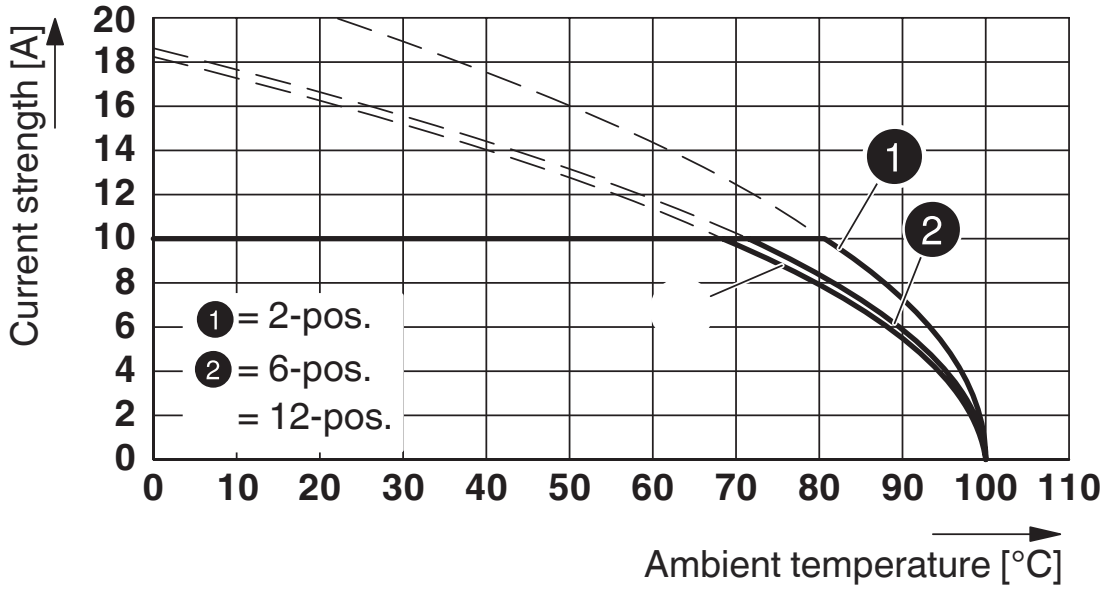

Type: PTS 1,5/...-PH-5,0 CLIP with PST 1,3/...-5,0

Dimensional drawing

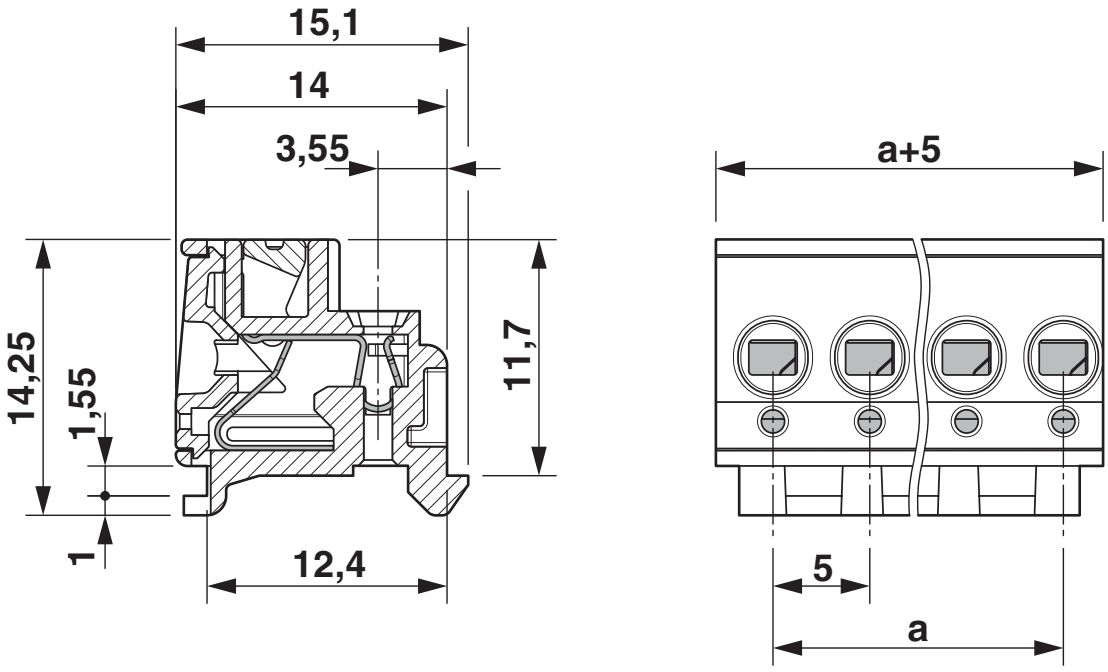

Approvals

To download certificates, visit the product detail page: https://www.phoenixcontact.com/us/products/1848639

cULus Recognized
Approval ID: E60425-20030211

	Nominal voltage U_N	Nominal current I_N	Cross section AWG	Cross section mm^2
Use group B				
	300 V	7 A	26 - 14	-
Use group D				
	300 V	7 A	26 - 14	-

VDE Gutachten mit Fertigungsüberwachung
Approval ID: 40040542

	Nominal voltage U_N	Nominal current I_N	Cross section AWG	Cross section mm^2
	320 V	10 A	-	0.2 - 2.5

Classifications

ECLASS

ECLASS-11.0	27460202
ECLASS-12.0	27460202
ECLASS-13.0	27460202

ETIM

ETIM 9.0	EC002638

UNSPSC

UNSPSC 21.0	39121400

Environmental product compliance

EU RoHS

Fulfills EU RoHS substance requirements	Yes, No exemptions

China RoHS

Environment friendly use period (EFUP)	EFUP-E
	No hazardous substances above the limits

EU REACH SVHC

REACH candidate substance (CAS No.)	No substance above 0.1 wt%

Accessories

SZF 1-0,6X3,5 - Screwdriver

1204517

https://www.phoenixcontact.com/us/products/1204517



Actuation tool, for ST terminal blocks, also suitable for use as a bladed screwdriver, size: 0.6 x 3.5 x 100 mm, 2-component grip, with non-slip grip

PST 1,3/12-5,0 - Pin strip

1933286

https://www.phoenixcontact.com/us/products/1933286



Pin strip, nominal cross section: 1.5 mm^2, color: black, nominal current: 12 A (depends on the plug used), rated voltage (III/2): 320 V, contact surface: Tin, contact connection type: Pin, number of potentials: 12, number of rows: 1, number of positions: 12, number of connections: 12, product range: PST 1,3/..-V, pitch: 5 mm, mounting: THR soldering, pin layout: Linear pinning, solder pin [P]: 3.5 mm, plug-in system: COMBICON PST 1,3, locking: without, mounting: without, type of packaging: packed in cardboard, The maximum current depends on the plug used. The lower of the two current values apply for plug and pin strip. The pin strip is made of highly temperature resistant plastic and is thus suitable for the reflow process.

PTS 1,5/12-PH-5,0 CLIP - PCB connectors

1848639

https://www.phoenixcontact.com/us/products/1848639

PST 1,3/12-H-5,0 - Pin strip

1717356

https://www.phoenixcontact.com/us/products/1717356



Pin strip, nominal cross section: 1.5 mm^2, color: black, nominal current: 12 A (depends on the plug used), rated voltage (III/2): 320 V, contact surface: Tin, contact connection type: Pin, number of potentials: 12, number of rows: 1, number of positions: 12, number of connections: 12, product range: PST 1,3/..-H, pitch: 5 mm, mounting: THR soldering, pin layout: Linear pinning, solder pin [P]: 6.8 mm, plug-in system: COMBICON PST 1,3, locking: without, mounting: without, type of packaging: packed in cardboard, The maximum current depends on the plug used. The lower of the two current values apply for plug and pin strip. The pin strip is made of highly temperature resistant plastic and is thus suitable for the reflow process.

Phoenix Contact 2024 © - all rights reserved
https://www.phoenixcontact.com

Phoenix Contact USA
586 Fulling Mill Road
Middletown, PA 17057, United States
(+717) 944-1300
info@phoenixcon.com