Data sheet



MLG30S-1770A10501

MLG-2

AUTOMATION LIGHT GRIDS

SICK
Sensor Intelligence.



Illustration may differ

Ordering information

Type	part no.
MLG30S-1770A10501	1221118

Other models and accessories ➜ www.sick.com/MLG-2

Detailed technical data

Features

Device version	Prime - Standard functionality
Sensor principle	Sender/receiver
Minimum detectable object (MDO)	34 mm [1]
Beam separation	30 mm
Type of synchronization	Optical
Number of beams	60
Detection height	1,770 mm
Software features (default)	
Q_{A1}	Height measurement (first beam)/FBB
Q_{A2}	Height measurement (last beam)/LBB
Q_1	Presence detection
inverted	–
Teach	–
Operating mode	
Standard	✓
Function	
Cross beam	✓
Beam blanking	✓
Applications	

[1] Depending on beam separation without cross beam setting.

Switching output	Object detectionObject recognitionHeight classification
Data interface	Object detectionObject height measurement
Included with delivery	1 × sender 1 × receiver 4/6 x QuickFix brackets (6 x QuickFix brackets for monitoring heights above 2 m) 1 × Quick Start Guide

[1] Depending on beam separation without cross beam setting.

Mechanics/electronics

Light source	LED, Infrared light
Wave length	850 nm
Supply voltage V_S	DC 19.2 V ... 28.8 V [1]
Power consumption sender	58 mA [2]
Power consumption receiver	132 mA [2]
Ripple	< 5 V_{pp}
Output current $I_{max.}$	100 mA
Output load, capacitive	100 nF
Output load, Inductive	1 H
Initialization time	< 1 s
Switching output	Push-pull: PNP/NPN
Connection type	Plug, M12, 5-pin, 0.22 m
Housing material	Aluminum
Display	LED
Enclosure rating	IP65, IP67 [3]
Circuit protection	U_V connections, reverse polarity protected Output Q short-circuit protected Interference pulse suppression
Protection class	III
Weight	3.849 kg
Front screen	PMMA
Option	None
UL File No.	NRKH.E181493

[1] Without load.
[2] Without load with 24 V.
[3] Operating in outdoor condition only with a external protection housing.

Performance

Maximum range	7 m [1]
Minimum range	≥ 0.2 m
Operating range	5 m
Response time	8.2 ms

[1] No reserve for environmental issue and deterioration of the diode.

Interfaces

IO-Link	✓ , IO-Link V1.1
Data transmission rate	38,4 kbit/s (COM2)
Maximum cable length	20 m
Cycle time	6 ms
VendorID	26
DeviceID HEX	800067
DeviceID DEC	8388711
Process data length	6 Byte (TYPE_2_V) [1]
Analog	✓ , Current
Inputs/outputs	2 x analog + 1 x Q (IO-Link)
Analog output (current)	4 mA ... 20 mA
Analog output	Q_{A1}, Q_{A2}
Number	2
Type	Current output
Current	4 mA ... 20 mA
Digital output	Q_1
Number	1

[1] For an IO-Link master with V1.0, reverts to interleaved mode (consisting of TYPE_1_1 (ProcessData) and TYPE_1_2 (on-request data)).

Ambient data

Shock resistance	Continuous shocks 10 g, 16 ms, 1000 shocks Single shocks 15 g, 11 ms 3 per axle
Vibration resistance	Sinusoidal oscillation 10-150 Hz 5 g
EMC	EN 60947-5-2
Ambient light immunity	Direct: 12,000 lx [1] Indirect: 50,000 lx [2]
Ambient operating temperature	–30 °C ... +55 °C
Ambient temperature, storage	–40 °C ... +70 °C

[1] Outdoor mode.
[2] Light resistance indirect.

Smart Task

Smart Task name	Base logics

Certificates

EU declaration of conformity	✓
UK declaration of conformity	✓
ACMA declaration of conformity	✓
Moroccan declaration of conformity	✓
China-RoHS	✓
cULus certificate	✓
IO-Link	✓
Photobiological safety (IEC EN 62471)	✓

Classifications

ECLASS 5.0	27270910
ECLASS 5.1.4	27270910
ECLASS 6.0	27270910
ECLASS 6.2	27270910
ECLASS 7.0	27270910
ECLASS 8.0	27270910
ECLASS 8.1	27270910
ECLASS 9.0	27270910
ECLASS 10.0	27270910
ECLASS 11.0	27270910
ECLASS 12.0	27270910
ETIM 5.0	EC002549
ETIM 6.0	EC002549
ETIM 7.0	EC002549
ETIM 8.0	EC002549
UNSPSC 16.0901	39121528

Dimensional drawing

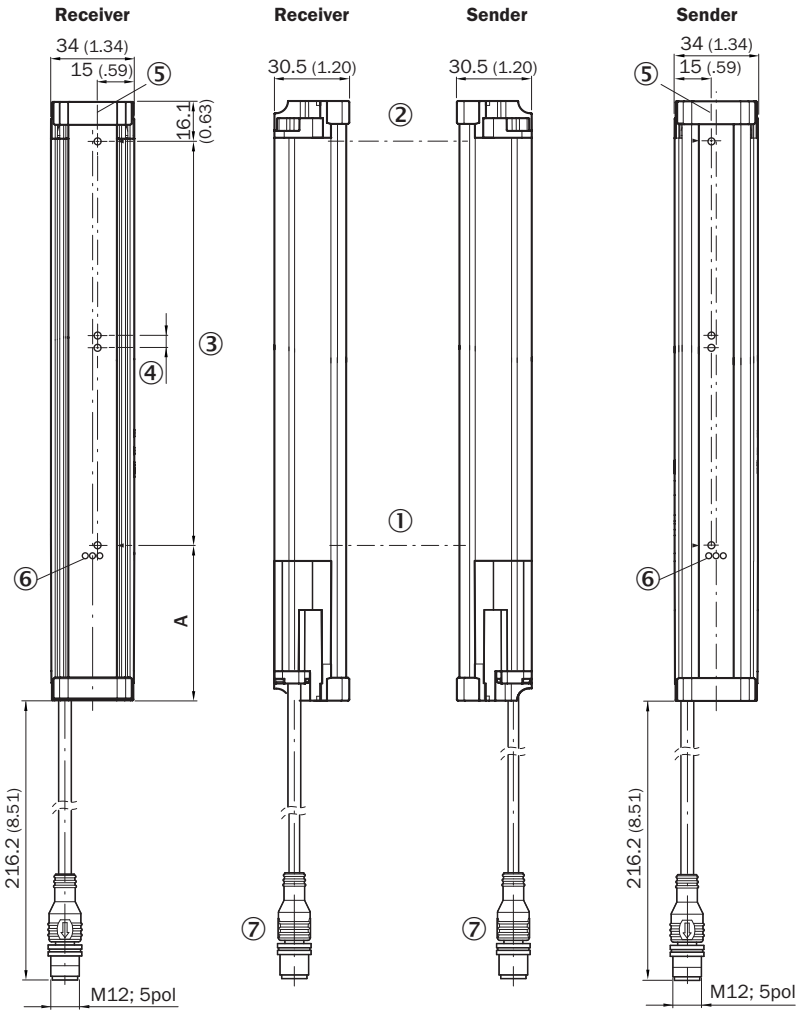

	A [1]
Beam separation 5 mm	63.3 (2.49)
Beam separation 10 mm	68.3 (2.69)
Beam separation 20 mm	68.3 (2.69)/78.3 (3.08) [2]
Beam separation 25 mm	83.3 (3.28)
Beam separation 30 mm	88.3 (3.48)
Beam separation 50 mm	108.3 (4.26)

[1] Distance: MLG edge - first beam
[2] MLG20x-xx**40**: 68.3 mm
MLG20x-xx**80**: 78.3 mm

Dimensions in mm (inch)
① First beam
② last beam
③ detection height (see technical data)
④ Beam separation
⑤ Optical axis
⑥ status indicator: green, yellow, red LEDs
⑦ Connection

Connection type and diagram Connector M12, 5-pin, analog outputs Q_A

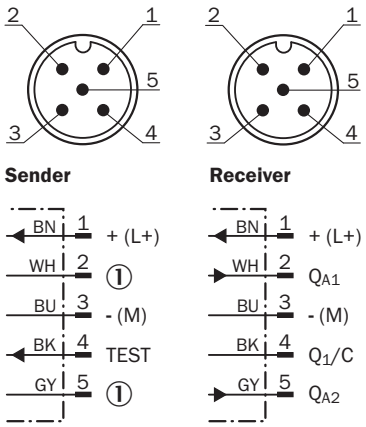

① Not assigned

Adjustments

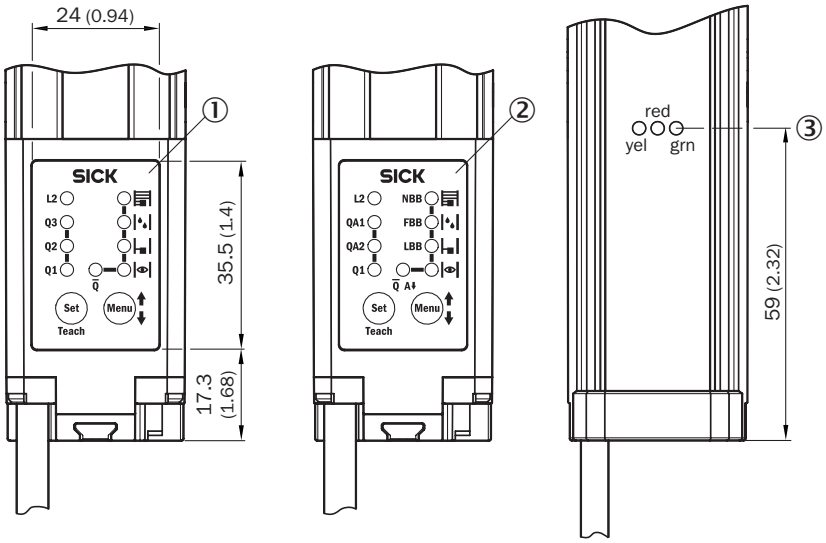

① MLG-2 with switching outputs Q
② MLG-2 with analog outputs Q_A
③ status indicator: green, yellow, red LEDs

Functional principle Optical synchronization

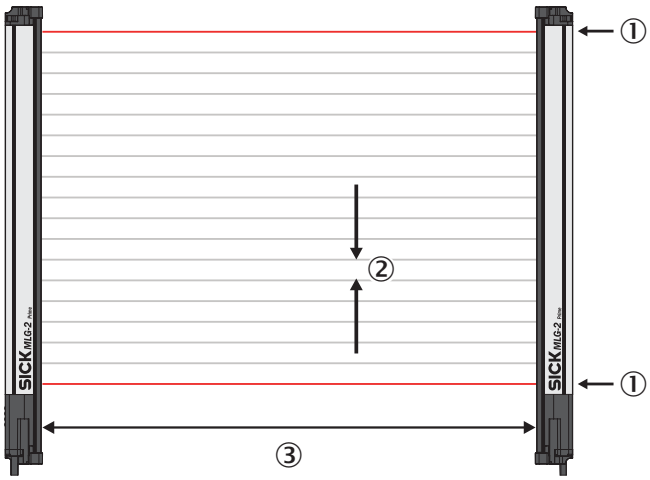

The sender and receiver synchronize with each other optically, so no electrical connection is necessary.
For this reason, either the first or the last beam of the automation light grid must remain clear.
If both beams are interrupted, no measurements can be taken.
① Optical synchronization
② Beam separation
③ scanning range

Recommended accessories

Other models and accessories ➜ www.sick.com/MLG-2

	Brief description	Type	part no.
connectors and cables			
	• **Connection type head A:** Female connector, M12, 5-pin, straight, A-coded • **Connection type head B:** Flying leads • **Signal type:** Sensor/actuator cable • **Cable:** 5 m, 5-wire, PVC • **Description:** Sensor/actuator cable, unshielded • **Application:** Zones with chemicals, Uncontaminated zones	YF2A15-050VB5XLEAX	2096240

	Brief description	Type	part no.
network devices			
		SIG350-0004AP100	6076871
		SIG350-0005AP100	6076923
		SIG350-0006AP100	6076924

SICK AT A GLANCE

SICK is one of the leading manufacturers of intelligent sensors and sensor solutions for industrial applications. A unique range of products and services creates the perfect basis for controlling processes securely and efficiently, protecting individuals from accidents and preventing damage to the environment.

We have extensive experience in a wide range of industries and understand their processes and requirements. With intelligent sensors, we can deliver exactly what our customers need. In application centers in Europe, Asia and North America, system solutions are tested and optimized in accordance with customer specifications. All this makes us a reliable supplier and development partner.

Comprehensive services complete our offering: SICK LifeTime Services provide support throughout the machine life cycle and ensure safety and productivity.

For us, that is “Sensor Intelligence.”

WORLDWIDE PRESENCE:

Contacts and other locations –www.sick.com