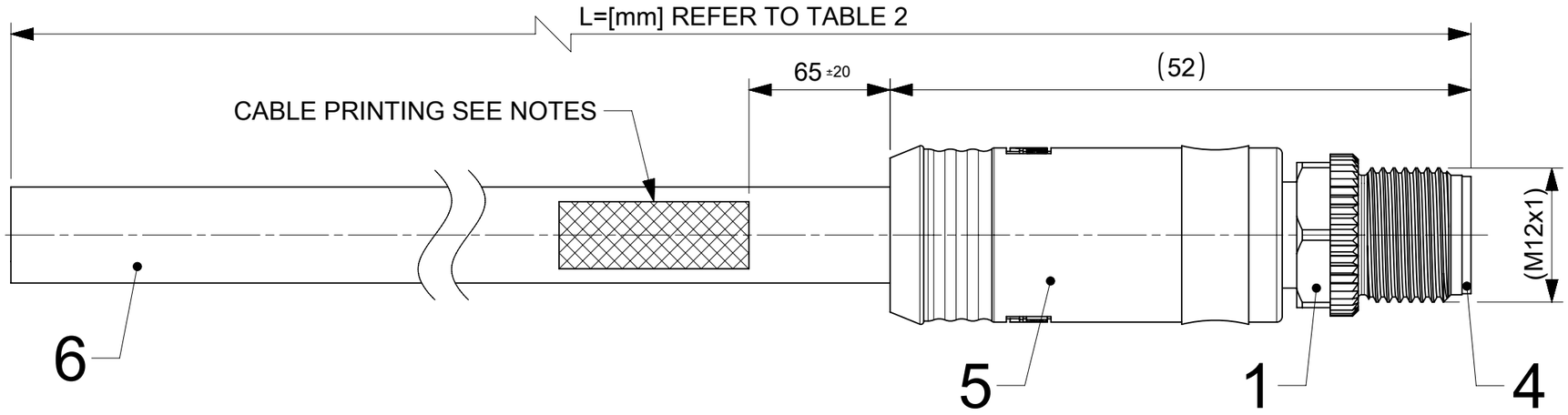

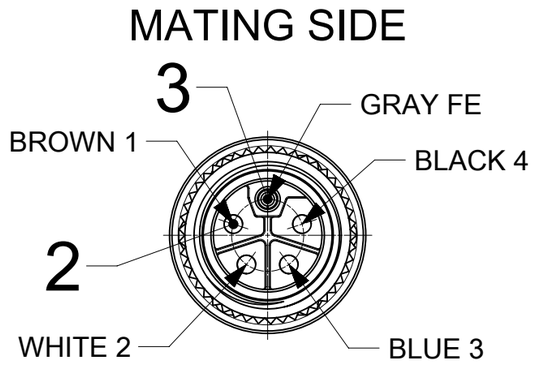

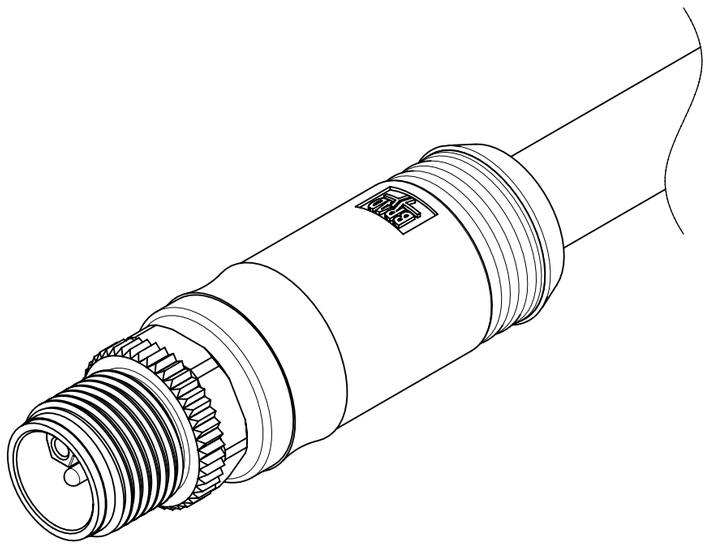

NOTES:

RATED VOLTAGE: MAX. 63V AC/DC
RATED CURRENT: MAX. 12A at 40°C (derating has to be considered)
IP RATING: IP67 (mated and locked condition)
TEMPERATURE RANGE: -25°C TO +85°C

CABLE PRINTING (sequence as shown below):
- MOLEX part number
- "Made in " COUNTRY OF ORIGIN
- MOLEX AND DATE OF MANUFACTURING (YY=YEAR; WW=WEEK): MXYYWW
- Not for current interrupting

PART ACCORDING PRODUCT SPEC: 1205010169
PACKAGING ACCORDING PACKAGING SPEC: 1201202000

TABLE 1

	POS	DESCRIPTION	MATERIAL	FINISH
	1	NUT M12 MA	BRASS	Ni
	2	CONTACT 15 MA	BRASS	Au
	3	CONTACT 15 FE	BRASS	Au
	4	INSERT	PA	GREY
	5	OVERMOLD	TPE	BLACK
	6	CABLE 5x1.5 D8.6 WSOR	PUR	GREY
OPTIONAL	7	ID CARRIER	-	-

THIS DRAWING CONTAINS INFORMATION THAT IS PROPRIETARY TO MOLEX ELECTRONIC TECHNOLOGIES, LLC AND SHOULD NOT BE USED WITHOUT WRITTEN PERMISSION

FUNCTIONAL SYMBOLS: FA = 0, FC = 0, FP = 0
DIVISIONAL SYMBOLS

DIMENSION UNITS	SCALE
mm	2:1

GENERAL TOLERANCES (UNLESS SPECIFIED)

ANGULAR TOL	±	1.0 °
4 PLACES	±	
3 PLACES	±	
2 PLACES	±	0.05
1 PLACE	±	0.3
0 PLACES	±	0.5

DRAFT WHERE APPLICABLE MUST REMAIN WITHIN DIMENSIONS

CURRENT REV DESC: UPDATED ATTRIBUTE TO GENERAL MARKET IN ECTR

EC NO: 735577
DRWN: NIKHIS3 2023/01/12
CHK'D: RSILLER 2023/01/19
APPR: RSILLER 2023/01/19

INITIAL REVISION:
DRWN: FDAFERNER 2020/08/18
APPR: RSILLER 2022/12/05

THIRD ANGLE PROJECTION | DRAWING: A3-SIZE | SERIES: 120500

molex

CSE M12 5P LC MA STR WSOR GY XM UNSH 1.5

PRODUCT CUSTOMER DRAWING

DOCUMENT NUMBER	DOC TYPE	DOC PART	REVISION
1205000314	PSD	000	A1

MATERIAL NUMBER	CUSTOMER	SHEET NUMBER
SEE TABLE 2	GENERAL MARKET	1 OF 2

DOCUMENT STATUS	P1	RELEASE DATE	2023/01/19 11:13:34

FORMAT: master-tb-mod-A3
REVISION: J
DATE: 2020/01/14

ENGINEERING NO - NUMERICAL CODE (Available parts see PART LIST table. Other parts available upon request).

1	2	3	4	5	6	7	8	9	10	11	12	13	14	OPTIONAL
L	0	P	X	0	0	6	B	6	6	M	X	X	X	X

- 1: L = L-Code — First End
- 2: 0 = SE — Second End
- 3: P = Power
- 4: 4 = 4 POLES; 5 = 5 POLES — Number of Pins
- 5–7: SINGLE ENDED UNSHLD; 006 = male straight — Head configuration
- 8–10: B66 = CABLE 5X1.5 WSOR GY D8.6 TPU UNSH — Cable used
- 11: M = Meter — Unit of measure
- 12–14: 005 = 0.5 Meter; 010 = 1 Meter; 020 = 2 Meter; 100 = 10 Meter; 150 = 15 Meter — Cable length
- OPTIONAL: H = ID Tag

TABLE 2

NOMINAL SECTION 1,5mm²			
MATERIAL NO.	ENGINEERING NO.	L [mm]	TOLERANCE [mm]
1205000314	L0P5006B66M010	1000	+40
1205000315	L0P5006B66M020	2000	+60
1205000316	L0P5006B66M030	3000	+60
1205000317	L0P5006B66M050	5000	+60
1205000318	L0P5006B66M100	10000	+80
1205000319	L0P5006B66M150	15000	+140
1205000320	L0P5006B66M200	20000	+140

DOCUMENT STATUS	P1	RELEASE DATE	2023/01/19 11:13:34

FORMAT: master_Sheet-A3
REVISION: J
DATE: 2020/01/14

THIS DRAWING CONTAINS INFORMATION THAT IS PROPRIETARY TO MOLEX ELECTRONIC TECHNOLOGIES, LLC AND SHOULD NOT BE USED WITHOUT WRITTEN PERMISSION

FUNCTIONAL SYMBOLS: FA = 0; FC = 0; FD = 0

DIVISIONAL SYMBOLS

DIMENSION UNITS	SCALE
mm	1:1

GENERAL TOLERANCES (UNLESS SPECIFIED)

ANGULAR TOL	± 1.0 °
4 PLACES	±
3 PLACES	±
2 PLACES	± 0.05
1 PLACE	± 0.3
0 PLACES	± 0.5

DRAFT WHERE APPLICABLE MUST REMAIN WITHIN DIMENSIONS

CURRENT REV DESC: UPDATED ATTRIBUTE TO GENERAL MARKET IN ECTR

EC NO: 735577
DRWN: NIKHIS3 2023/01/12
CHK'D: RSILLER 2023/01/19
APPR: RSILLER 2023/01/19

INITIAL REVISION:
DRWN: FDAFERNER 2020/08/18
APPR: RSILLER 2022/12/05

molex

CSE M12 5P LC MA STR WSOR GY XM UNSH 1.5

PRODUCT CUSTOMER DRAWING

DOCUMENT NUMBER	DOC TYPE	DOC PART	REVISION
1205000314	PSD	000	A1

THIRD ANGLE PROJECTION	DRAWING	SERIES	MATERIAL NUMBER	CUSTOMER	SHEET NUMBER
	A3-SIZE	120500	SEE TABLE 2	GENERAL MARKET	2 OF 2