Data sheet | Item number: 769-612/002-000

1-conductor male connector; CAGE CLAMP®; 4 mm²; Pin spacing 5 mm; 12-pole; clamping collar; 4,00 mm²; gray

www.wago.com/769-612/002-000

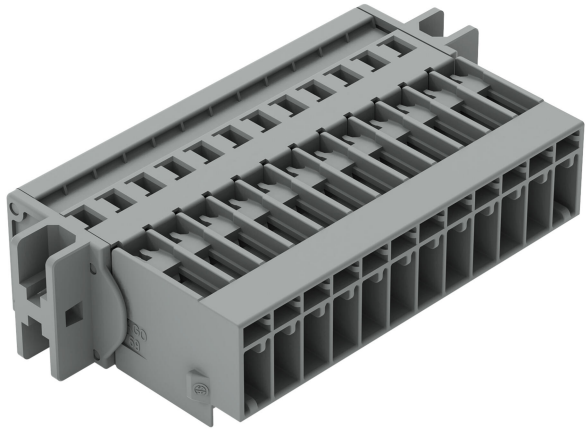

Color:

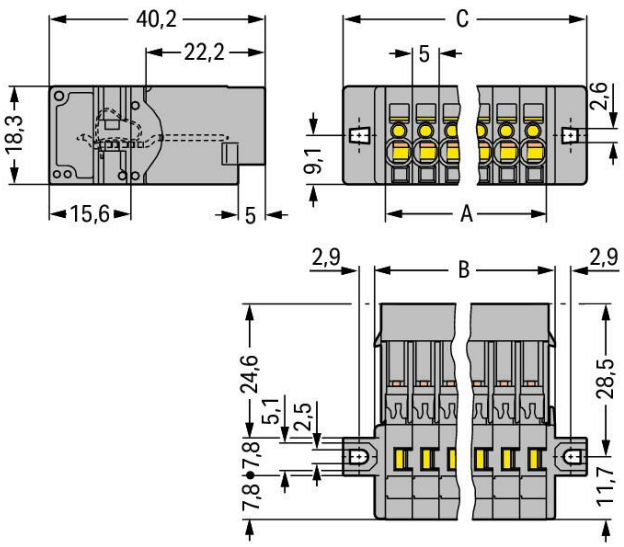

C = A + 15.4 mm
B = A + 3.6 mm
A = pole no. x pin spacing

Data

Electrical data

Ratings per IEC/EN

Nominal voltage (III/3)	500 V
Rated impulse voltage (III/3)	6 kV
Rated current	32 A
Legend (ratings)	(III / 3) ≙ Overvoltage category III / Pollution degree 3

Connection data

Connection points	12
Total number of potentials	12

Subject to changes. Please also observe the further product documentation!

WAGO GmbH & Co. KG
Hansastr. 27
32423 Minden
Phone: +49571 887-0 | Fax: +49571 887-169
Email: info.de@wago.com | Web: www.wago.com

Do you have any questions about our products?
We are always happy to take your call at +49 (571) 887-44222.

Connection 1

Connection technology	CAGE CLAMP®
Actuation type	Operating tool
Connectable conductor materials	Copper
Nominal cross-section	4 mm² / 12 AWG
Solid conductor	0.08 … 4 mm² / 28 … 12 AWG
Fine-stranded conductor	0.08 … 4 mm² / 28 … 12 AWG
Strip length	8 … 9 mm / 0.31 … 0.35 inches
Pole number	12
Wiring direction	Front-entry wiring

Physical data

Pin spacing	5 mm / 0.197 inches
Width	75.4 mm / 2.969 inches
Height from the surface	18.3 mm / 0.72 inches
Depth	40.2 mm / 1.583 inches

Mechanical data

Variable coding	Yes
Direct ground contact to DIN-rail/drilled hole/housing	No
Mounting type	Mounting flange
Anti-rotation protection	Yes

Plug-in connection

Contact type (pluggable connector)	Male connector/plug
Connector (connection type)	for conductor
Mismating protection	No
Plugging without loss of pin spacing	No

Material data

Note (material data)	Information on material specifications can be found here
Color	gray
Material group	I
Insulation material	Polyamide (PA66)

Subject to changes. Please also observe the further product documentation!

WAGO GmbH & Co. KG
Hansastr. 27
32423 Minden
Phone: +49571 887-0 | Fax: +49571 887-169
Email: info.de@wago.com | Web: www.wago.com

Do you have any questions about our products?
We are always happy to take your call at +49 (571) 887-44222.

Flammability class per UL94	V0
Fire load	0.812 MJ
Weight	36.6 g

Environmental requirements

Processing temperature	-35 … +85 °C
Continuous operating temperature	-60 … +105 °C

Commercial data

eCl@ss 10.0	27-14-11-06
eCl@ss 9.0	27-14-11-06
ETIM 8.0	EC001284
ETIM 7.0	EC001284
ECCN	NO DATA
PU (SPU)	25 pcs
Packaging type	Box
Country of origin	PL
GTIN	4044918521734
Customs tariff number	85366930000

Environmental Product Compliance

RoHS Compliance Status	Compliant,No Exemption

Approvals / Certificates

General approvals

Logo	Approval	Additional Approval Text	Certificate name
	CCA DEKRA Certification B.V.	EN 60947	NTR NL-7626
	CCA DEKRA Certification B.V.	EN 61984	2190419.02
	CCA DEKRA Certification B.V.	IEC 61984	NL-47799/A1
	CSA	C22.2	1101144

Subject to changes. Please also observe the further product documentation!

WAGO GmbH & Co. KG
Hansastr. 27
32423 Minden
Phone: +49571 887-0 | Fax: +49571 887-169
Email: info.de@wago.com | Web: www.wago.com

Do you have any questions about our products?
We are always happy to take your call at +49 (571) 887-44222.

	CSA Group		
	KEMA/KEUR DEKRA Certification B.V.	EN 60947	2190419.01
	UL Underwriters Laboratories Inc.	UL 1977	E 45171
	UR Underwriters Laboratories Inc.	UL 1059	E45172

Declarations of conformity and manufacturer's declarations

Logo	Approval	Additional Approval Text	Certificate name
	EU-Declaration of Conformity WAGO GmbH & Co. KG	-	-
	UK-Declaration of Conformity WAGO GmbH & Co. KG	-	-

Approvals for marine applications

Logo	Approval	Additional Approval Text	Certificate name
	DNV GL Det Norske Veritas, Germanischer Lloyd	-	TAE00001V2

Counterpart

Item no.769-112/021-000
1-conductor female connector; CAGE CLAMP®; 4 mm²; Pin spacing 5 mm; 12-pole; coding finger; Lateral locking levers; 4,00 mm²; gray

www.wago.com/769-112/021-000

Subject to changes. Please also observe the further product documentation!

WAGO GmbH & Co. KG
Hansastr. 27
32423 Minden
Phone: +49571 887-0 | Fax: +49571 887-169
Email: info.de@wago.com | Web: www.wago.com

Do you have any questions about our products?
We are always happy to take your call at +49 (571) 887-44222.

Item no.769-132
2-conductor female connector; CAGE CLAMP®; 4 mm²; Pin spacing 5 mm; 12-pole; coding finger; 4,00 mm²; gray
www.wago.com/769-132

Item no.769-112
1-conductor female connector; CAGE CLAMP®; 4 mm²; Pin spacing 5 mm; 12-pole; coding finger; 4,00 mm²; gray
www.wago.com/769-112

Optional accessories

Marking accessories

Marking strip

Item no.: 210-831
Marking strips; on reel; 2.3 mm wide; plain; Self-adhesive; white
www.wago.com/210-831

Item no.: 210-833
Marking strips; 25 m on roll; 6 mm wide; plain; Self-adhesive; white
www.wago.com/210-833

Item no.: 210-834
Marking strips; on reel; 5 mm wide; plain; Self-adhesive; white
www.wago.com/210-834

Item no.: 210-832
Marking strips; on reel; 3 mm wide; plain; Self-adhesive; white
www.wago.com/210-832

Marker

Item no.: 248-501
Mini-WSB marking card; as card; not stretchable; plain; snap-on type; white
www.wago.com/248-501

Protective warning marker

Cover

Item no.: 280-415
Protective warning marker; for 5 terminal blocks; with high-voltage symbol, black; yellow
www.wago.com/280-415

Strain relief

Strain relief

Item no.: 769-414
Strain relief plate; for female and male connectors; 1 part; Pin spacing 5 mm; 10- to 15-pole; gray
www.wago.com/769-414

Ferrule

Ferrule

Item no.: 216-101
Ferrule; Sleeve for 0.5 mm² / AWG 22; uninsulated; electro-tin plated; silver-colored
www.wago.com/216-101

Item no.: 216-104

Subject to changes. Please also observe the further product documentation!

WAGO GmbH & Co. KG
Hansastr. 27
32423 Minden
Phone: +49571 887-0 | Fax: +49571 887-169
Email: info.de@wago.com | Web: www.wago.com

Do you have any questions about our products?
We are always happy to take your call at +49 (571) 887-44222.

	Ferrule; Sleeve for 1.5 mm² / AWG 16; uninsulated; electro-tin plated; silver-colored	www.wago.com/216-104
	Item no.: 216-102 Ferrule; Sleeve for 0.75 mm² / AWG 20; uninsulated; electro-tin plated; silver-colored	www.wago.com/216-102
	Item no.: 216-103 Ferrule; Sleeve for 1 mm² / AWG 18; uninsulated; electro-tin plated	www.wago.com/216-103
	Item no.: 216-203 Ferrule; Sleeve for 1 mm² / AWG 18; insulated; electro-tin plated; red	www.wago.com/216-203
	Item no.: 216-206 Ferrule; Sleeve for 2.5 mm² / AWG 14; insulated; electro-tin plated; blue	www.wago.com/216-206
	Item no.: 216-202 Ferrule; Sleeve for 0.75 mm² / 18 AWG; insulated; electro-tin plated; gray	www.wago.com/216-202
	Item no.: 216-204 Ferrule; Sleeve for 1.5 mm² / AWG 16; insulated; electro-tin plated; black	www.wago.com/216-204
	Item no.: 216-201 Ferrule; Sleeve for 0.5 mm² / 20 AWG; insulated; electro-tin plated; white	www.wago.com/216-201
Coding		
Coding		
	Item no.: 769-435 Coding pin; for coding of female plugs; for carrier terminal blocks / male connectors; orange	www.wago.com/769-435
Insulation stop		
Insulation stop		
	Item no.: 769-470 Insulation stop; 0.08 - 0.2 mm² "s" (0.14 mm² "f-st"); 5 pieces/strip; white	www.wago.com/769-470
	Item no.: 769-471 Insulation stop; 0.25 - 0.5 mm²; 5 pieces/strip; light gray	www.wago.com/769-471
	Item no.: 769-472 Insulation stop; 0.75 - 1 mm²; 5 pieces/strip; dark gray	www.wago.com/769-472
Tool		
Operating tool		
	Item no.: 210-490 Operating tool	www.wago.com/210-490
	Item no.: 769-434 Operating tool; made of insulating material; 1-way; loose; white	www.wago.com/769-434

Subject to changes. Please also observe the further product documentation!

WAGO GmbH & Co. KG
Hansastr. 27
32423 Minden
Phone: +49571 887-0 | Fax: +49571 887-169
Email: info.de@wago.com | Web: www.wago.com

Do you have any questions about our products?
We are always happy to take your call at +49 (571) 887-44222.

Downloads

Documentation

Bid Text

769-612/002-000 X81 - Datei	2019 年2月19 日	xml 3.3 kB	Download
769-612/002-000 doc - Datei	2017 年10 月4 日	doc 25.6 kB	Download

Additional Information

Technical Section Technical explanations	pdf 2.3 MB	Download

CAD/CAE-Data

CAD data

2D/3D Models 769-612/002-000	URL	Download

CAE data

EPLAN Data Portal 769-612/002-000	URL	Download
WSCAD Universe 769-612/002-000	URL	Download
ZUKEN Portal 769-612/002-000	URL	Download
EPLAN Data Portal 769-612/002-000	URL	Download
WSCAD Universe 769-612/002-000	URL	Download

Asset Administration Shell

Asset Administration Shell 769-612/002-000	URL	Download

Environmental Product Compliance

Compliance Search

Environmental Product Compliance 769-612/002-000	URL	Download

Subject to changes. Please also observe the further product documentation!

WAGO GmbH & Co. KG
Hansastr. 27
32423 Minden
Phone: +49571 887-0 | Fax: +49571 887-169
Email: info.de@wago.com | Web: www.wago.com

Do you have any questions about our products?
We are always happy to take your call at +49 (571) 887-44222.

1-conductor male connector; CAGE CLAMP®; 4 mm²; Pin spacing 5 mm; 12-pole; clamping collar; 4,00 mm²; gray

Installation Notes

Installation

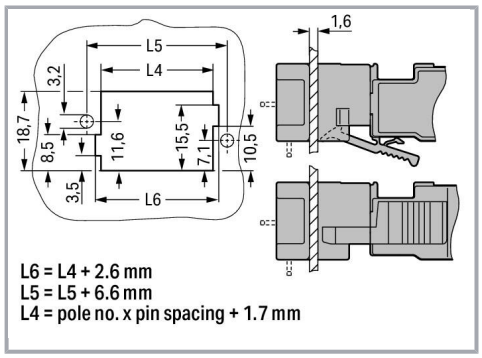

Cutout
Headers with solder pins and mounting flanges

Conductor termination

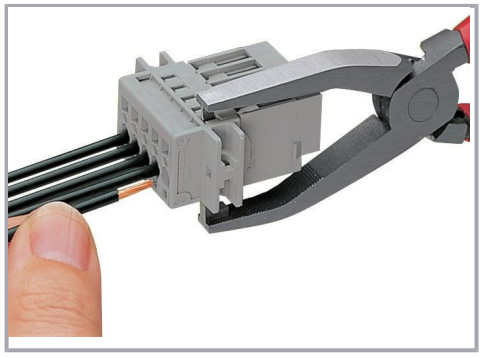

Operating tool
Inserting a conductor via operating tool
(example shows a male connector).

Application

WAGO GmbH & Co. KG
Hansastr. 27
32423 Minden
Phone: +49571 887-0 | Fax: +49571 887-169
Email: info.de@wago.com | Web: www.wago.com

Do you have any questions about our products?
We are always happy to take your call at +49 (571) 887-44222.

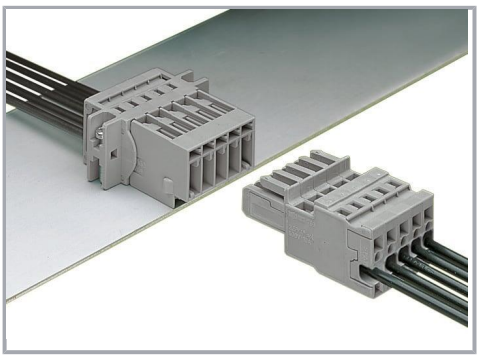

Male connector with CAGE CLAMP® and mounting flanges
1-connector female plug, straight

Marking

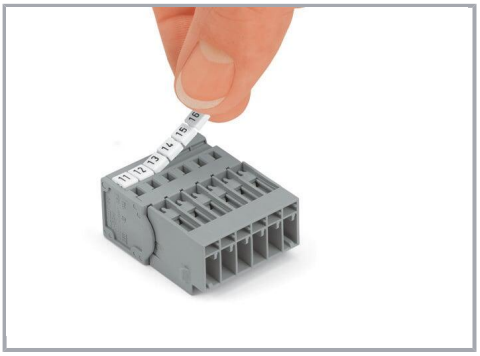

Labeling a male connector with CAGE CLAMP® connection via Mini-WSB Quick Markers.

Product family

X-COM
Show all products from the family

Subject to changes. Please also observe the further product documentation!

WAGO GmbH & Co. KG
Hansastr. 27
32423 Minden
Phone: +49571 887-0 | Fax: +49571 887-169
Email: info.de@wago.com | Web: www.wago.com

Do you have any questions about our products?
We are always happy to take your call at +49 (571) 887-44222.