Data sheet | Item number: 218-508/000-012

PCB terminal block; Locking slides; 0.5 mm²; Pin spacing 2.54 mm; 8-pole; CAGE CLAMP®; 0,50 mm²; orange

www.wago.com/218-508/000-012

Picture differs from the item.

Color:

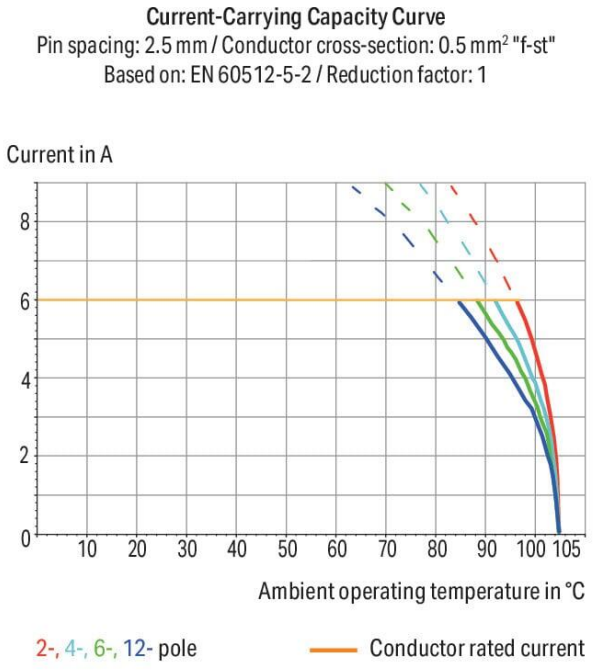

Subject to changes. Please also observe the further product documentation!

WAGO GmbH & Co. KG
Hansastr. 27
32423 Minden
Phone: +49571 887-0 | Fax: +49571 887-169
Email: info.de@wago.com | Web: www.wago.com

Do you have any questions about our products?
We are always happy to take your call at +49 (571) 887-44222.

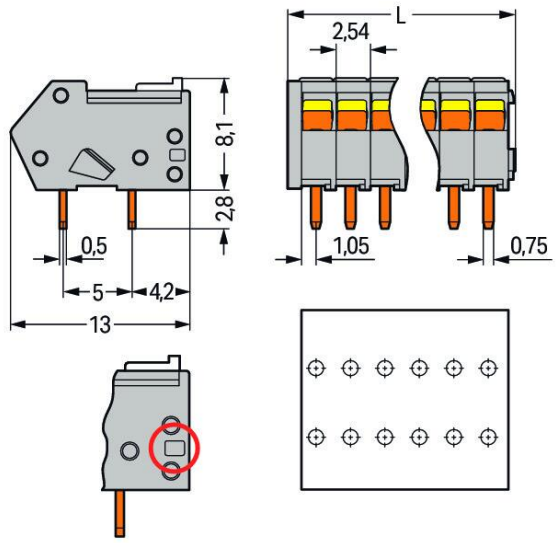

Dimensions in mm
L = (pole no. x pin spacing) + 1.5 mm
A groove at the back of the terminal strip indicates the 2.54 mm pin spacing (red circle).

Item description

- Terminal strips are just 8.1 mm tall and feature an innovative, locking slide-actuated CAGE CLAMP®.
- Several clamping units can be held open simultaneously.
- Easily terminate stranded conductors in tight spaces (e.g., bus connectors).

Data
Notes

Variants:	Other pole numbers Other colors Mixed-color PCB connector strips Direct marking Other versions (or variants) can be requested from WAGO Sales or configured at https://configurator.wago.com/.

Electrical data

Ratings per IEC/EN

Ratings per	IEC/EN 60664-1

Subject to changes. Please also observe the further product documentation!

WAGO GmbH & Co. KG
Hansastr. 27
32423 Minden
Phone: +49571 887-0 | Fax: +49571 887-169
Email: info.de@wago.com | Web: www.wago.com

Do you have any questions about our products?
We are always happy to take your call at +49 (571) 887-44222.

Nominal voltage (III/3)	80 V
Rated impulse voltage (III/3)	2.5 kV
Rated voltage (III/2)	160 V
Rated impulse voltage (III/2)	2.5 kV
Nominal voltage (II/2)	320 V
Rated surge voltage (II/2)	2.5 kV
Rated current	6 A
Legend (ratings)	(III / 2) ≙ Overvoltage category III / Pollution degree 2

Ratings per UL

Approvals per	UL 1059
Rated voltage UL (Use Group B)	150 V
Rated current UL (Use Group B)	4 A

Ratings per CSA

Approvals per	CSA
Rated voltage CSA (Use Group B)	150 V
Rated current CSA (Use Group B)	4 A

Connection data

Connection points	8
Total number of potentials	8
Number of connection types	1
Number of levels	1

Connection 1

Connection technology	CAGE CLAMP®
Actuation type	Slider
Solid conductor	0.08 … 0.5 mm² / 28 … 20 AWG
Fine-stranded conductor	0.08 … 0.5 mm² / 28 … 20 AWG
Fine-stranded conductor; with insulated ferrule	0.25 mm²
Fine-stranded conductor; with uninsulated ferrule	0.25 mm²
Note (conductor cross-section)	Terminating 0.75 mm²/18 AWG conductors is possible; however insulation diameter allows only every other clamping unit to be terminated with this conductor size.
Strip length	5 … 6 mm / 0.2 … 0.24 inches
Conductor connection direction to PCB	40 °

Subject to changes. Please also observe the further product documentation!

WAGO GmbH & Co. KG
Hansastr. 27
32423 Minden
Phone: +49571 887-0 | Fax: +49571 887-169
Email: info.de@wago.com | Web: www.wago.com

Do you have any questions about our products?
We are always happy to take your call at +49 (571) 887-44222.

Pole number	8

Physical data

Pin spacing	2.54 mm / 0.1 inches
Width	21.82 mm / 0.859 inches
Height	10.9 mm / 0.429 inches
Height from the surface	8.1 mm / 0.319 inches
Depth	13 mm / 0.512 inches
Solder pin length	2.8 mm
Solder pin dimensions	0.5 x 0.75 mm
Drilled hole diameter with tolerance	1.1 $^{(+0.1)}$ mm

PCB contact

PCB contact	THT
Solder pin arrangement	over the entire terminal strip (in-line)
Number of solder pins per potential	2

Material data

Note (material data)	Information on material specifications can be found here
Color	orange
Material group	I
Insulation material	Polyamide (PA66)
Flammability class per UL94	V0
Clamping spring material	Chrome-nickel spring steel (CrNi)
Contact material	Electrolytic copper (E_{Cu})
Contact plating	Tin
Fire load	0.035 MJ
Weight	2.7 g

Environmental requirements

Limit temperature range	-60 … +105 °C

Commercial data

Product Group	4 (Printed Circuit Connectors)

Subject to changes. Please also observe the further product documentation!

WAGO GmbH & Co. KG
Hansastr. 27
32423 Minden
Phone: +49571 887-0 | Fax: +49571 887-169
Email: info.de@wago.com | Web: www.wago.com

Do you have any questions about our products?
We are always happy to take your call at +49 (571) 887-44222.

eCl@ss 10.0	27-44-04-01
eCl@ss 9.0	27-44-04-01
ETIM 8.0	EC002643
ETIM 7.0	EC002643
ECCN	NO DATA
PU (SPU)	220 (55) pcs
Packaging type	Box
Country of origin	PL
GTIN	4044918878418
Customs tariff number	85369010000

Environmental Product Compliance

RoHS Compliance Status	Compliant,No Exemption

Approvals / Certificates

General approvals

Logo	Approval	Additional Approval Text	Certificate name
	CSA DEKRA Certification B.V.	C22.2 No. 158	1565656
	UL UL International Germany GmbH	UL 1059	E45172

Optional accessories

Ferrule

Ferrule		
	Item no.: 216-131 Ferrule; Sleeve for 0.25 mm² / AWG 24; uninsulated; electro-tin plated; silver-colored	www.wago.com/216-131
	Item no.: 216-151 Ferrule; Sleeve for 0.25 mm² / AWG 24; uninsulated; electro-tin plated	www.wago.com/216-151
	Item no.: 216-301 Ferrule; Sleeve for 0.25 mm² / AWG 24; insulated; electro-tin plated; yellow	www.wago.com/216-301
	Item no.: 216-321 Ferrule; Sleeve for 0.25 mm² / AWG 24; insulated; electro-tin plated; yellow	www.wago.com/216-321

Subject to changes. Please also observe the further product documentation!

WAGO GmbH & Co. KG
Hansastr. 27
32423 Minden
Phone: +49571 887-0 | Fax: +49571 887-169
Email: info.de@wago.com | Web: www.wago.com

Do you have any questions about our products?
We are always happy to take your call at +49 (571) 887-44222.

Marking accessories		
Marking strip		
	Item no.: 210-331/254-204 Marking strips; as a DIN A4 sheet; MARKED; 17-32 (400x); Height of marker strip: 2.3 mm/0.091 in; Strip length 182 mm; Horizontal marking; Self-adhesive; white	www.wago.com/210-331/254-204
	Item no.: 210-331/254-206 Marking strips; as a DIN A4 sheet; MARKED; 33-48 (400x); Height of marker strip: 2.3 mm/0.091 in; Strip length 182 mm; Horizontal marking; Self-adhesive; white	www.wago.com/210-331/254-206
	Item no.: 210-331/254-202 Marking strips; as a DIN A4 sheet; MARKED; 1-16 (400x); Height of marker strip: 2.3 mm/0.091 in; Strip length 182 mm; Horizontal marking; Self-adhesive; white	www.wago.com/210-331/254-202
	Item no.: 210-331/254-207 Marking strips; as a DIN A4 sheet; MARKED; 1-48 (100x); Height of marker strip: 2.3 mm/0.091 in; Strip length 182 mm; Horizontal marking; Self-adhesive; white	www.wago.com/210-331/254-207
Testing and measuring		
Testing accessories		
	Item no.: 735-500 WAGO Test pin; 1 mm Ø; 30 V AC / 60 V DC; CAT0; 1 A; 6 mm uninsulated; Test lead for soldering up to 0,5mm²	www.wago.com/735-500
Tool		
Operating tool		
	Item no.: 210-648 Operating tool; Blade: 2.5 x 0.4 mm; with a partially insulated shaft; angled; short	www.wago.com/210-648
	Item no.: 210-719 Operating tool; Blade: 2.5 x 0.4 mm; with a partially insulated shaft	www.wago.com/210-719

Downloads

Documentation

Additional Information

Technical Section Technical explanations	2019 年4月3日	pdf 2.1 MB	Download

CAD/CAE-Data

CAD data

2D/3D Models 218-508/000-012	URL	Download

Subject to changes. Please also observe the further product documentation!

WAGO GmbH & Co. KG
Hansastr. 27
32423 Minden
Phone: +49571 887-0 | Fax: +49571 887-169
Email: info.de@wago.com | Web: www.wago.com

Do you have any questions about our products?
We are always happy to take your call at +49 (571) 887-44222.

PCB Design

Symbol and Footprint via Ultra Librarian 218-508/000-012	URL	Download

CAx data for your PCB design, consisting of "schematic symbols and PCB footprints", allow easy integration of the WAGO component into your development environment.

Supported formats:

- Accel EDA 14 & 15
- Altair
- Altium 6 to current version
- Autodesk Fusion 360
- Cadence Allegro
- DesignSpark
- Eagle Libraries
- KiCad
- Mentor Graphics
- BoardStation
- Mentor Graphics Design Architect
- Mentor Graphics Design
- Expedition 99 and 2000
- OrCAD 9.X PCB and Capture
- PADS PowerPCB 3, 3.5, 4.X, and 5.X
- PADS PowerPCB and PowerLogic 3.0
- PCAD 2000, 2001, 2002, 2004, and 2006
- Pulsonix 8.5 or newer
- STL
- 3D STEP
- TARGET 3001!
- View Logic ViewDraw
- Quadcept
- Zuken CadStar 3 and 4
- Zuken CR-5000 and CR-8000
- Zuken eCADSTAR 2020 and 2021Zuken CR-5000 and CR-8000

PCB Component Libraries (EDA), PCB CAD Library Ultra Librarian

Symbol and Footprint via SamacSys 218-508/000-012	URL	Download

Subject to changes. Please also observe the further product documentation!

WAGO GmbH & Co. KG
Hansastr. 27
32423 Minden
Phone: +49571 887-0 | Fax: +49571 887-169
Email: info.de@wago.com | Web: www.wago.com

Do you have any questions about our products?
We are always happy to take your call at +49 (571) 887-44222.

CAx data for your PCB design, consisting of "schematic symbols and PCB footprints", allow easy integration of the WAGO component into your development environment.

Supported formats:

- 3D (stp)
- Altium
- CADSTAR
- Capture
- CircuitStudio
- CR-5000
- CR-8000
- DEHDL
- DesignSpark PCB
- DesignSpark PCB PRO
- DipTrace
- EAGLE
- Easy-PC
- EasyEDA
- eCADSTAR
- KiCad
- OrCAD_Allegro16
- PADS
- Proteus
- Pulsonix
- Quadcept
- SOLIDWORKS PCB
- TARGET 3001!
- xDX Designer
- Xpedition

PCB Component Libraries (EDA), PCB CAD Library SamacSys Electronic Component Search Engine

CAE data

ZUKEN Portal 218-508/000-012	URL	Download

Asset Administration Shell

Asset Administration Shell 218-508/000-012
Subject to changes. Please also observe the further product documentation!

WAGO GmbH & Co. KG
Hansastr. 27
32423 Minden
Phone: +49571 887-0 | Fax: +49571 887-169
Email: info.de@wago.com | Web: www.wago.com

Do you have any questions about our products?
We are always happy to take your call at +49 (571) 887-44222.

URL Download

Environmental Product Compliance

Compliance Search

Environmental Product Compliance 218-508/000-012 PCB terminal block; Locking slides; 0.5 mm²; Pin spacing 2.54 mm; 8-pole; CAGE CLAMP®; 0,50 mm²; orange	URL	Download

Installation Notes

Conductor termination

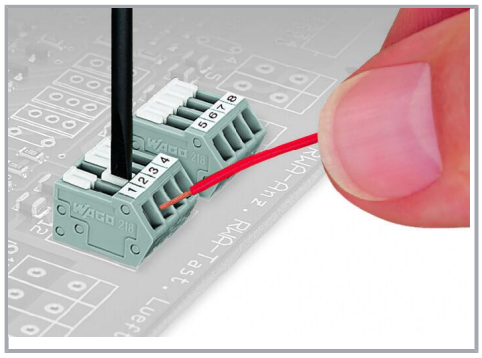

Terminating stranded conductors in confined spaces requires a great deal of patience, unless you use the new 218 Series PCB Terminal Strips. The clamping units of these strips can be held open during termination process via integrated locking slide.

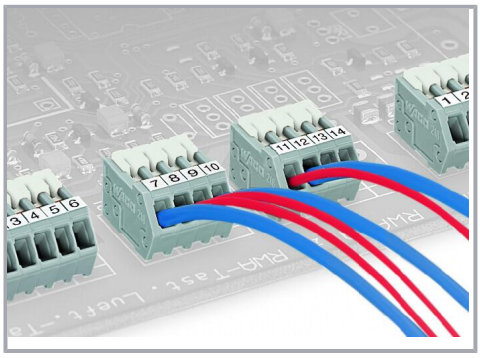

Terminating 0.75 mm²/18 AWG conductors is possible; however insulation diameter allows only every other clamping unit to be terminated with this conductor size.

Subject to changes. Please also observe the further product documentation!

WAGO GmbH & Co. KG
Hansastr. 27
32423 Minden
Phone: +49571 887-0 | Fax: +49571 887-169
Email: info.de@wago.com | Web: www.wago.com

Do you have any questions about our products?
We are always happy to take your call at +49 (571) 887-44222.

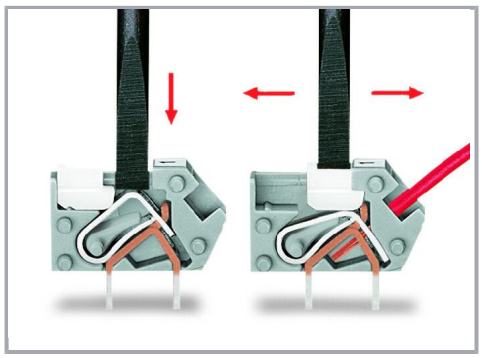

Conductor termination: To momentarily open the clamping unit, use screwdriver and then insert a stripped conductor. To open clamping unit for an extended period, move locking slide toward conductor entry hole. Then fully insert stripped conductor and move locking slide back to original position (also possible to perform with fingernail).

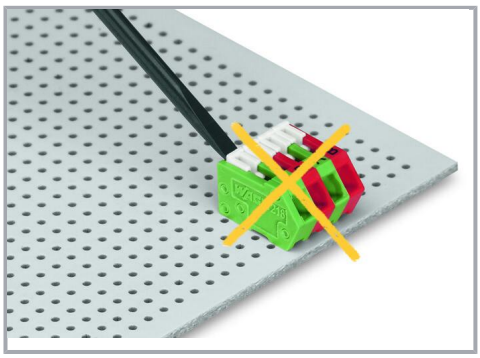

Incorrect – do not operate the locking slides from the back.

Marking

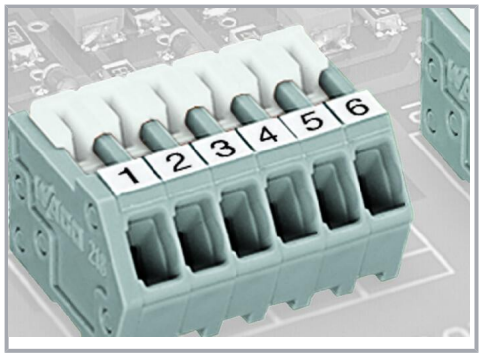

Labeling with self-adhesive marking strips.

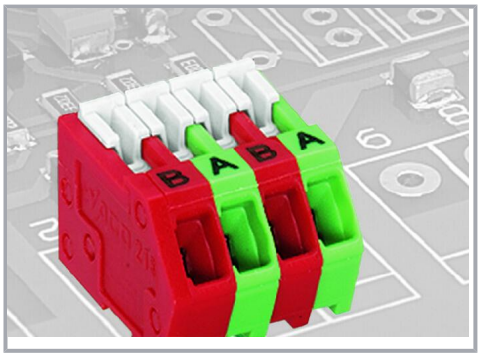

Labeling via factory direct marking.

Testing

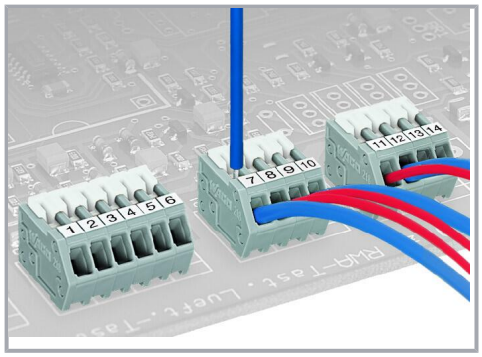

Testing directly on the clamping spring.

Subject to changes. Please also observe the further product documentation!

WAGO GmbH & Co. KG
Hansastr. 27
32423 Minden
Phone: +49571 887-0 | Fax: +49571 887-169
Email: info.de@wago.com | Web: www.wago.com

Do you have any questions about our products?
We are always happy to take your call at +49 (571) 887-44222.