# 5650963-5 ✔ ACTIVE

EUROCARD

TE Internal #: 5650963-5

Receptacle, Board-to-Board, 96 Position, 2.54 mm [.1 in] Centerline, Printed Circuit Board, 3 Row, Vertical, 32 Column, Eurocard Connectors

View on TE.com >

Connectors > PCB Connectors > Backplane Connectors > Eurocard Connectors



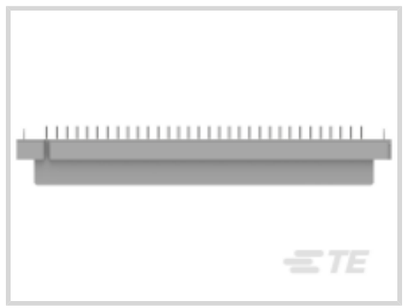
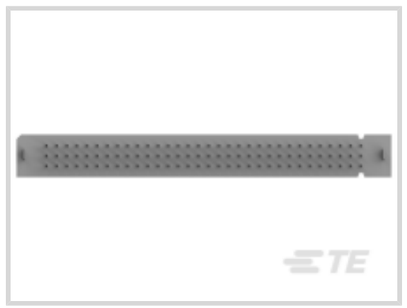
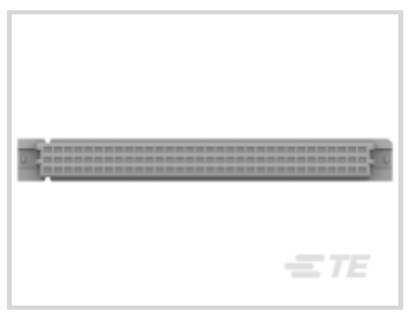

Connector & Housing Type: **Receptacle**

Connector System: **Board-to-Board**

Termination Post & Tail Length: **3.3 mm [ .13 in ]**

Number of Positions: **96**

Centerline (Pitch): **2.54 mm [ .1 in ]**

## Features

### Product Type Features

| | |
|---|---|
| Connector & Housing Type | Receptacle |
| Connector System | Board-to-Board |
| Connector & Contact Terminates To | Printed Circuit Board |
| DIN Size | Standard |
| DIN Level | II |

### Configuration Features

| | |
|---|---|
| Mating & Unmating Configuration | Make First / Break Last |
| Number of Positions | 96 |
| Number of Rows | 3 |
| PCB Mount Orientation | Vertical |
| Number of Columns | 32 |
| Rows Loaded | A, B, C |
| Number of Signal Positions | 96 |

### Body Features

| | |
|---|---|
| Primary Product Color | Gray |

## Contact Features

| | |
|---|---|
| PCB Contact Termination Area Plating Material Thickness | .1 – .2 µm[3.93 – 7.87 µin] |
| Contact Mating Area Plating Material | Gold (Au) |
| Contact Base Material | Copper Alloy |
| PCB Contact Termination Area Plating Material | Tin |
| Contact Type | Socket |
| Contact Mating Area Plating Material Thickness | .003 µm |
| Contact Current Rating (Max) | 1.5 A |

## Termination Features

| | |
|---|---|
| Termination Method to PCB | Through Hole - Solder |
| Termination Post & Tail Length | 3.3 mm[.13 in] |

## Mechanical Attachment

| | |
|---|---|
| Connector Mounting Type | Board Mount |
| Mating Retention | Without |
| PCB Mount Retention Type | Boardlock |
| Mating Alignment Type | Polarization |
| Mating Alignment | With |
| PCB Mount Retention | With |

## Housing Features

| | |
|---|---|
| Housing Material | Polyester GF |
| Centerline (Pitch) | 2.54 mm[.1 in] |

## Dimensions

| | |
|---|---|
| PCB Thickness (Recommended) | 1.57 mm[.062 in] |
| Connector Height | 11.5 mm[.453 in] |
| Row-to-Row Spacing | 2.54 mm[.1 in] |

## Usage Conditions

| | |
|---|---|
| Operating Temperature Range | -55 – 105 °C[-67 – 221 °F] |

## Operation/Application

| | |
|---|---|
| Circuit Application | Signal |

## Packaging Features

| | |
|---|---|
| Packaging Method | Box |

## Product Compliance

For compliance documentation, visit the product page on TE.com>

| | |
|---|---|
| EU RoHS Directive 2011/65/EU | Compliant |
| EU ELV Directive 2000/53/EC | Compliant |
| China RoHS 2 Directive MIIT Order No 32, 2016 | No Restricted Materials Above Threshold |
| EU REACH Regulation (EC) No. 1907/2006 | Current ECHA Candidate List: JUNE 2025 (250)<br>Candidate List Declared Against: JUNE 2025 (250)<br>Does not contain REACH SVHC |
| Halogen Content | Not Low Halogen - contains Br or Cl > 900 ppm. |
| Solder Process Capability | Wave solder capable to 265°C |

Product Compliance Disclaimer

This information is provided based on reasonable inquiry of our suppliers and represents our current actual knowledge based on the information they provided. This information is subject to change. The part numbers that TE has identified as EU RoHS compliant have a maximum concentration of 0.1% by weight in homogenous materials for lead, hexavalent chromium, mercury, PBB, PBDE, DBP, BBP, DEHP, DIBP, and 0.01% for cadmium, or qualify for an exemption to these limits as defined in the Annexes of Directive 2011/65/EU (RoHS2). Finished electrical and electronic equipment products will be CE marked as required by Directive 2011/65/EU. Components may not be CE marked. Additionally, the part numbers that TE has identified as EU ELV compliant have a maximum concentration of 0.1% by weight in homogenous materials for lead, hexavalent chromium, and mercury, and 0.01% for cadmium, or qualify for an exemption to these limits as defined in the Annexes of Directive 2000/53/EC (ELV). Regarding the REACH Regulation, the information TE provides on SVHC in articles for this part number is based on the latest European Chemicals Agency (ECHA) 'Guidance on requirements for substances in articles' posted at this URL: https://echa.europa.eu/guidance-documents/guidance-on-reach

## Compatible Parts

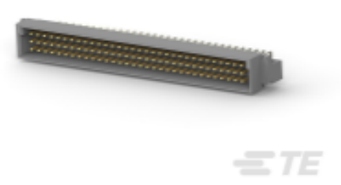

TE Part # 650473-3
096 EURO TYPE C PIN ST ASSY

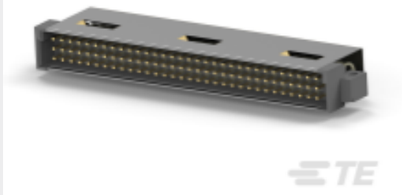

TE Part # 5536146-5
ASSY,PIN,ENH.TYPE C,EUROCARD,L-FREE,5 RO

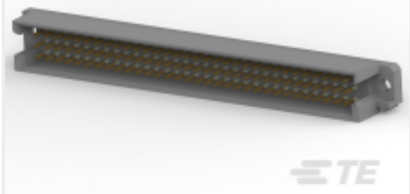

TE Part # 5650470-5
ASSY,PIN,EUROCARD,TYPE R,LEAD-

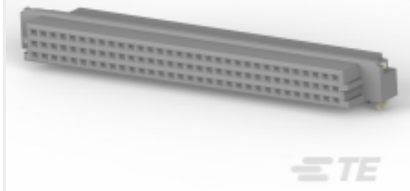

TE Part # 5650897-5
ASSY,RECEPT,EURO,TYPE R,L-FREE, A&C,64/96

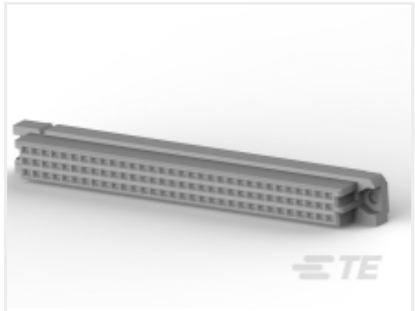

TE Part # 5535032-4
ASSY,RECEPTACLE,EUROCARD,TYPE

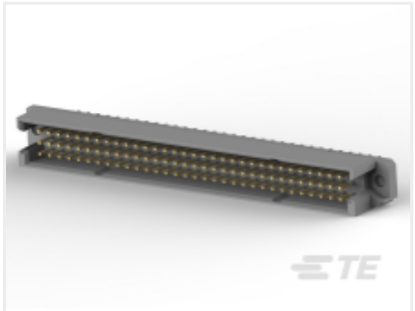

TE Part # 5536019-5
ASSY,PIN,EUROCARD,TYPE R,LEAD-FREE,96 PO



TE Part # 5650963-4
ASSY,RECEPTACLE,EUROCARD,TYPE



TE Part # 5148292-5
ASSY,RECEPTACLE,EUROCARD,TYPE



TE Part # 5536366-5
ASSY,PIN,EURO,TYPE C,LEAD-FREE,96 POS.,.

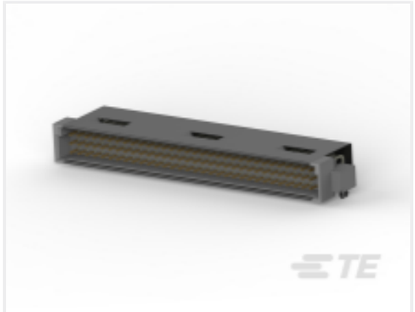

TE Part # 5536148-5
ASSY,PIN,ENH.TYPE C,EUROCARD,L-FREE,5ROW

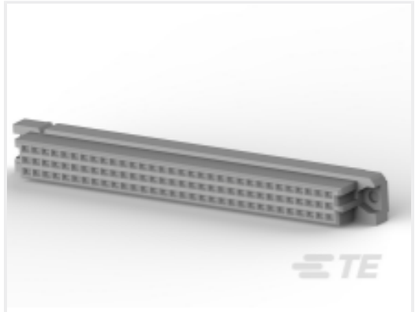

TE Part # 5535090-5
ASSEMBLY,RECEPTACLE,EUROCARD,T



TE Part # 5535090-4
ASSEMBLY,RECEPTACLE,EUROCARD,T



TE Part # 5536418-5
ASSY,RECEPT,EURO,TYPE C,LEAD-F



TE Part # 5148116-5
ASSY,PIN,EUROCARD,TYPE C,LEAD-FREE,96 PO



TE Part # 650461-4
096 EURO TYPE R RECPT ASSY

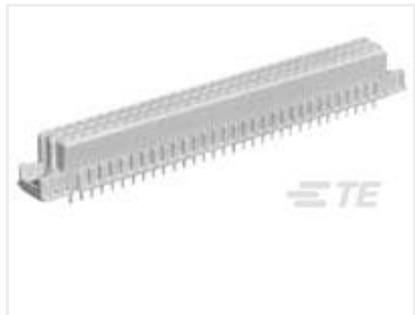

TE Part # 2-1393640-4
V42254B2102C960=PC612 FEDERLEI



TE Part # 215605-4
96P.IEC-C MALE CONN



TE Part # 148059-5
096 EURO TYP C RECP 17MM ASSY



TE Part # 650473-8
096 EURO TYPE C PIN ST ASSY



TE Part # 5536744-1
ASSY,PIN,EURO,TYPE R,LEAD-FREE,A&C,64/96

## Customers Also Bought



TE Part #5-102694-1
06 ampmodu mt assy dr.sn

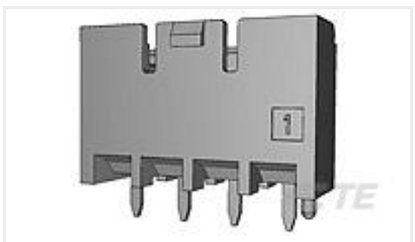

TE Part #1376421-1
10mm B-T-W Conn. 2P HDR ASSEMB

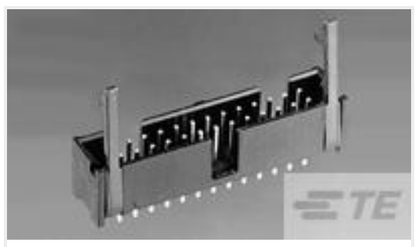

TE Part #2-1761609-7
IDC LOW PRO HDR 20P RA SHT LAT BLUE



TE Part #1879252-2
RP 2B 4R75 0.1% 15PPM 1K RL



TE Part #1939870-1
SD CARD CONNECTOR EMBOSS ASSY



TE Part #2102775-1
DC, 7Row, Half End, RTM, MULTIGIG RT 2R




TE Part #2176071-9
3521 300K 1% 2W



TE Part #7-2176087-4
RP 1J 0.166W 402R 0.1% 25PPM 1K RL



TE Part #2232511-5
3P, RAST 5 TAB HEADER, THV



TE Part #5650913-5
ASSY,PIN,EUROCARD,TYPE C,LEAD-

## Documents

### Product Drawings

ASSY,RECEPTACLE,EUROCARD,TYPE

English

### CAD Files

Customer View Model

ENG_CVM_CVM_5650963-5_O.2d_dxf.zip

English

3D PDF

3D

Customer View Model

ENG_CVM_CVM_5650963-5_O.3d_igs.zip

English

Customer View Model

ENG_CVM_CVM_5650963-5_O.3d_stp.zip

English

By downloading the CAD file I accept and agree to the Terms and Conditions of use.

### Product Specifications

Application Specification

English

### Agency Approvals

UL

English