DRAWING MADE IN THIRD ANGLE PROJECTION

LOC	DIST
AB	4

THIS DRAWING IS UNPUBLISHED. | RELEASED FOR PUBLICATION ,19

© COPYRIGHT 19 BY AMP INCORPORATED, HARRISBURG, PA. ALL INTERNATIONAL RIGHTS RESERVED. AMP PRODUCTS MAY BE COVERED BY U.S. AND FOREIGN PATENTS AND/OR PATENTS PENDING.

REVISIONS					
P	F	ZONE	LTR	DESCRIPTION	DATE	APPROVED
✓			0	WAS 86-5488-000	10/06/86	DEJ

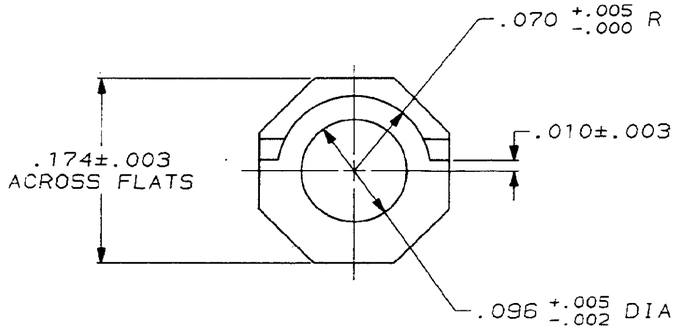

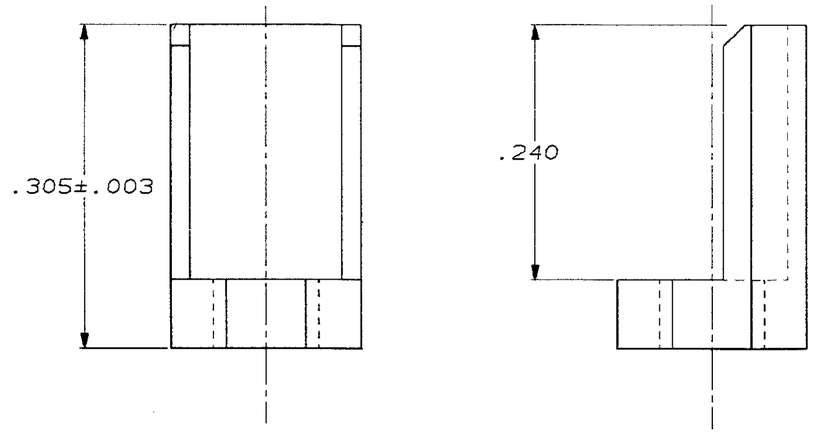

534763-1 AS SHOWN
TYPE 1

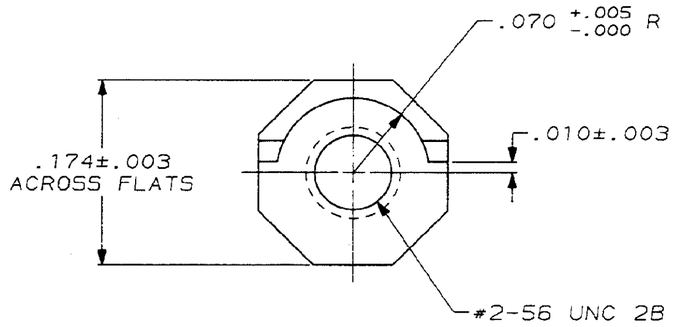

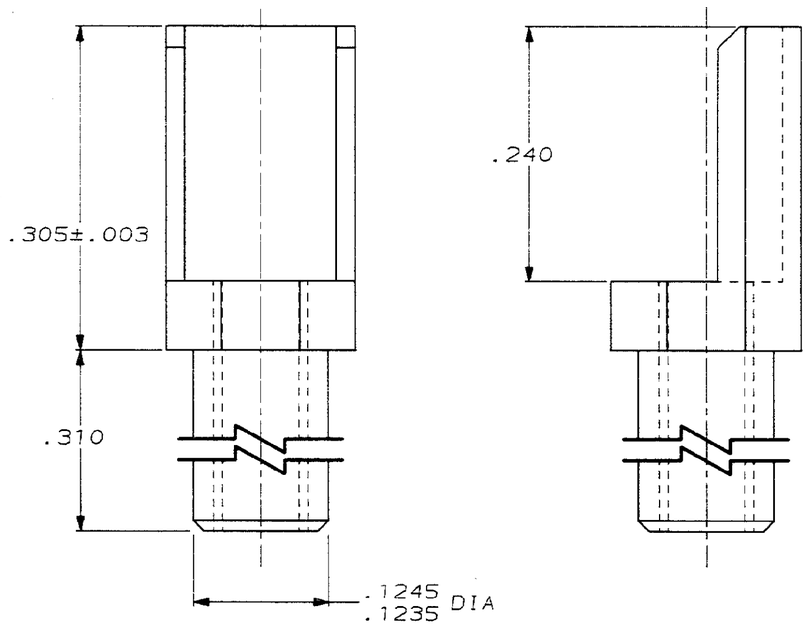

534763-3 AS SHOWN
TYPE 2

PART NO

UNLESS OTHERWISE SPECIFIED DIMENSIONS ARE IN INCHES. TOLERANCES ON : DECIMALS ±.005 ANGLES ±	CONTRACT NO	AMP | AMP INCORPORATED Harrisburg, Pa.
MATERIAL STAINLESS STEEL PER QQ-S-763 CLASS 303	DR DEJ 10-9-86	NAME HDI SERIES 25, EXTERNAL KEY
FINISH PASSIVATED PER QQ-P-35	CHK DJM 10-9-86	SIZE C | FSCM NO 00779 | DRAWING NO 534763
	APPD DJM 10-9-86	SCALE 10:1 | - | SHEET 1 of 1
	APPD	
	DSGN APPD	
	OTHER APPD	

PROTOTYPE STATUS
PACOM DEVELOPMENT ENGINEERING

AMP 1471-6 REV 2-81

CUSTOMER DRAWING