| TOLERANCE UNLESS OTHERWISE SPECIFIED | |
|---|---|
| 0-10 | ±0.20 |
| 10-30 | ±0.30 |
| 30-100 | ±0.40 |

THIS IS A C.A.D. GENERATED DRAWING
DO NOT MAKE MANUAL REVISIONS TO MASTER.

| ISSUE NUMBER | |
|---|---|
| ORIGINAL | 1 |

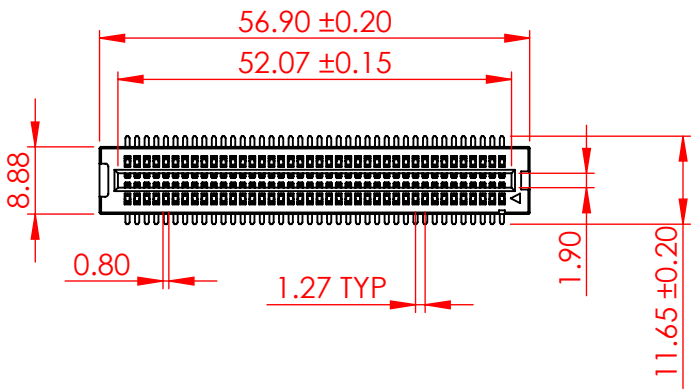


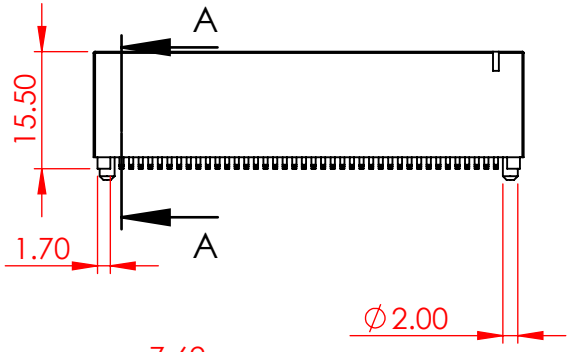


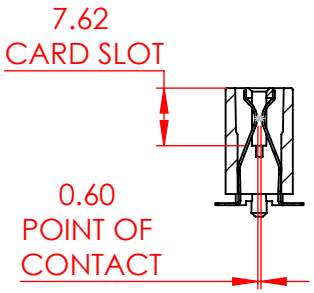


SECTION A-A
SCALE 1 : 1

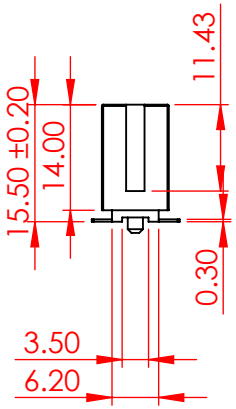


SPECIFICATIONS:

| | |
|---|---|
| MATERIAL: | |
| HOUSING: | HI-TEMP THERMOPLASTIC, PPS |
| CONTACT: | COPPER ALLOY |
| PLATING: | 15µ" GOLD PLATING ON CONTACT AREA, TIN PLATING ON SOLDERING AREA |
| ELECTRICAL | |
| VOLTAGE RATING: | 250 VAC RMS |
| CURRENT RATING: | 1A |
| DIELECTRIC WITHSTANDING VOLTAGE: | 500VAC RMS 60Hz FOR 60s |
| INSULATION RESISTANCE: | 1000 MEGA OHMS MIN AT 500VDC |
| CONTACT RESISTANCE: | 30 mOHMS MAX |
| MECHANICAL | |
| RETENTION FORCE: | 460g MIN PER CONTACT |
| INSERTION FORCE: | 230g MAX PER CONTACT PAIR |
| WITHDRAWAL FORCE: | 15g MIN PER CONTACT PAIR |
| ENVIRONMENTAL | |
| TEMPERATURE RANGE: | -55°C TO +105°C |

NOTE:
4 TO 124 POSITIONS ARE AVAILABLE EXCEPT 18, 28, 34, 38, 42 TO 46, 54 TO 58 POSITIONS

RoHS COMPLIANT

THIS SERIES FULLY CONFORMS TO THE EUROPEAN UNION DIRECTIVES 2011/65/EU FOR RoHS COMPLIANCY.

# 302 SERIES CARD EDGE CONNECTOR

| | | |
|---|---|---|
| ACAD REFERENCE NO.: 302 Assembly | | UNIT: MM |
| DRAWN: J.L. | DATE: June 6, 2023 | |
| CHECKED: | DATE: | |
| SCALE: 1:1 | SHEET 1 OF 2 | |
| DRAWING NUMBER: 302-080-399-205 | | ISSUE 1 |
| PART NUMBER: 302-080-399-205 | | |

EDAC INC
TORONTO, ONTARIO
CANADA
YOUR CONNECTION TO QUALITY & SERVICE

THESE DRAWINGS AND SPECIFICATIONS ARE THE PROPERTY OF EDAC INC.,AND SHALL NOT BE REPRODUCED,OR COPIED OR USED AS THE BASIS FOR THE MANUFACTURE OR SALE OF APPARATUS WITHOUT WRITTEN PERMISSION.

| NO. OF POS. | DIMENSION A | | | DIMENSION C | |
|---|---|---|---|---|---|
| | CONTACT CODE 21 | CONTACT CODE 58 | CONTACT CODE 99 | MOUNTING CODE 05 | MOUNTING CODE 06 |
| 04 | 1.27* | | | 5.08 | NA |
| 06 | 2.54* | | | 6.35 | NA |
| 08 | 3.81 | | | 7.62 | 7.62 |
| 10 | 5.08 | | | 8.89 | 8.89 |
| 12 | 6.35 | | | 10.16 | 10.16 |
| 14 | 7.62* | | | 11.43 | NA |
| 16 | 8.89 | | | 12.70 | 12.70 |
| 20 | 11.43 | | | 15.24 | 15.24 |
| 22 | 12.70* | | | 16.51 | NA |
| 24 | 13.97* | | | 17.78 | NA |
| 26 | 15.24* | | | 19.05 | NA |
| 30 | 17.78* | | | 21.59 | NA |
| 32 | 19.05* | | | 22.86 | NA |
| 36 | 21.59* | | | 25.40 | NA |
| 40 | 24.13 | | | 27.94 | 27.94 |
| 48 | 29.21* | | | 33.02 | NA |
| 50 | 30.48 | | | 34.29 | 34.29 |
| 52 | 31.75* | | | 35.56 | NA |
| 60 | 36.83 | | | 40.64 | 40.64 |
| 68 | 41.91 | NA | 41.91* | 45.72 | NA |
| 70 | 43.18 | NA | 43.18* | 46.99 | NA |
| 80 | 49.53 | | | 53.34 | 53.34 |
| 100 | 62.23 | NA | 62.23* | 66.04 | NA |
| 110 | 68.58 | NA | 68.58* | 72.39 | NA |
| 120 | 74.93 | NA | 74.93 | 78.74 | 78.74 |
| 124 | 77.47 | NA | 77.47* | 81.28 | NA |

*NOT AVAILABLE FOR CONTACT CODE 99 WITH MOUNTING CODE 06
NA = NOT AVAILABLE

THIS IS A C.A.D. GENERATED DRAWING
DO NOT MAKE MANUAL REVISIONS TO MASTER.

| ISSUE NUMBER | |
|---|---|
| ORIGINAL | 1 |

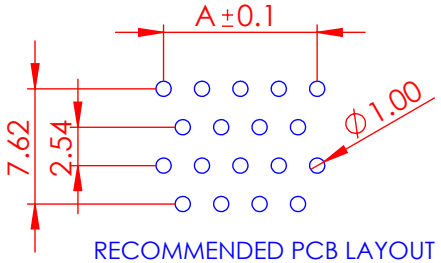

RECOMMENDED PCB LAYOUT
(CONTACT CODE 21)

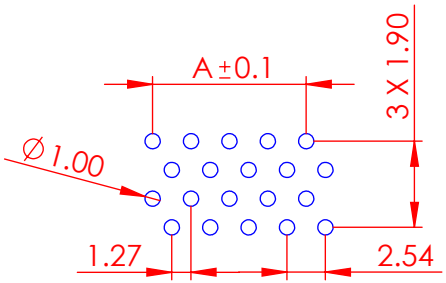

RECOMMENDED PCB LAYOUT
(CONTACT CODE 58)

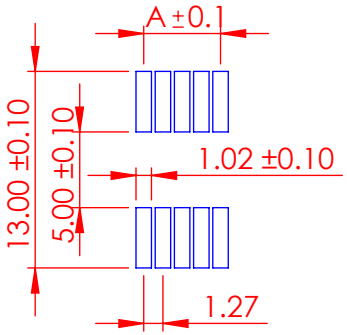

RECOMMENDED PCB LAYOUT
(CONTACT CODE 99, MOUNTING CODE 01)

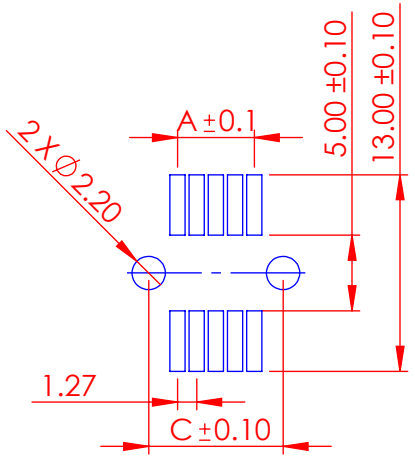

RECOMMENDED PCB LAYOUT
(CONTACT CODE 99, MOUNTING CODE 05)

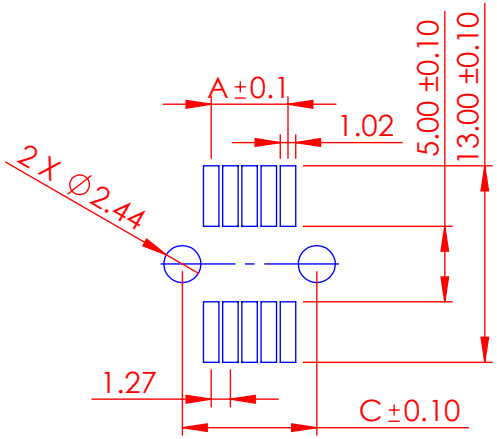

RECOMMENDED PCB LAYOUT
(CONTACT CODE 99, MOUNTING CODE 06)

302-080-399-205
- MOUNTING CODE
- CONTACT CODE

RoHS COMPLIANT

THIS SERIES FULLY CONFORMS TO THE EUROPEAN UNION DIRECTIVES 2011/65/EU FOR RoHS COMPLIANCY.

# 302 SERIES CARD EDGE CONNECTOR

| | | |
|---|---|---|
| ACAD REFERENCE NO.: 302 ASSEMBLY | | UNIT: MM |
| DRAWN: J.L. | DATE: June 6, 2023 | |
| CHECKED: | DATE: | |
| SCALE: 1:1 | SHEET 2 OF 2 | |
| DRAWING NUMBER: 302-080-399-205 | | ISSUE 1 |
| PART NUMBER: 302-080-399-205 | | |

EDAC INC
TORONTO, ONTARIO
CANADA
YOUR CONNECTION TO QUALITY & SERVICE

THESE DRAWINGS AND SPECIFICATIONS ARE THE PROPERTY OF EDAC INC.,AND SHALL NOT BE REPRODUCED,OR COPIED OR USED AS THE BASIS FOR THE MANUFACTURE OR SALE OF APPARATUS WITHOUT WRITTEN PERMISSION.