HC-M-08-EMC-DSUB-M - Connector

1066082

https://www.phoenixcontact.com/us/products/1066082

Please be informed that the data shown in this PDF document is generated from our online catalog. Please find the complete data in the user documentation. Our general terms of use for downloads are valid.



Connector, number of positions: 8, power contacts: 0, control contacts: 8, Pin, Crimp connection, 48 V, 5 A, 0.09 mm^2 ... 0.52 mm^2, external cable diameter:3 mm ... 9.5 mm, application: Data/signal

Commercial data

Item number	1066082
Packing unit	1 pc
Minimum order quantity	1 pc
Sales key	BF62
Product key	BF7ACB
Catalog page	Page 583 (C-2-2019)
GTIN	4055626728889
Weight per piece (including packing)	31.976 g
Weight per piece (excluding packing)	31.976 g
Customs tariff number	85389099
Country of origin	CN

Technical data

Notes

General	Order crimp contacts CUC-DSC-C1BAU-S/DSC... separately
General	The potential of the EMC connector housing is isolated from the potential of the heavy connector.
General	Clamps for the clamping range of 3 mm - 6 mm and 6 mm - 9. 5 mm
General	Can be used in Item No.: 1417374 HC-M-02-EMC-M

Product properties

Product type	EMC insert, modular
Series	HC-M-EMV
Application	Data/signal
Number of positions	8
Connection profile	8
Contact numbering	1 - 8
No. of power contacts	0
No. of control contacts	8
Contact material type	turned
Shielded	yes

Insulation characteristics

Overvoltage category	III
Degree of pollution	3

Electrical properties

Rated voltage (III/3)	48 V
Rated surge voltage	0.8 kV
Rated current	5 A

Connection data

Connection technology

Connection technology	Crimp connection

Conductor connection

Conductor cross section	0.09 mm² ... 0.52 mm²
Connection cross section AWG	28 ... 20

Dimensions

Dimensional drawing	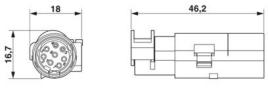

Height	15.5 mm
Length	46.2 mm

Mechanical characteristics

Contact diameter	1 mm

Material specifications

Material Line conductor	Zinc alloy
Flammability rating according to UL 94	V0
Contact material	Copper alloy
Contact surface material	Au
Contact carrier material	PC

Cable/line

External cable diameter	3 mm ... 9.5 mm

Mechanical properties

Mechanical data

Insertion/withdrawal cycles	≥ 500

Environmental and real-life conditions

Ambient conditions

Ambient temperature (operation)	-40 °C ... 85 °C

Mounting

Assembly instructions	The round contact carrier can be separated in the middle for the purpose of assembling/disassembling contacts. Disassemble the connector from the plastic module using the tool, order no.: 1678635 HC-M-EMV-KON-EWZ

Drawings

Dimensional drawing

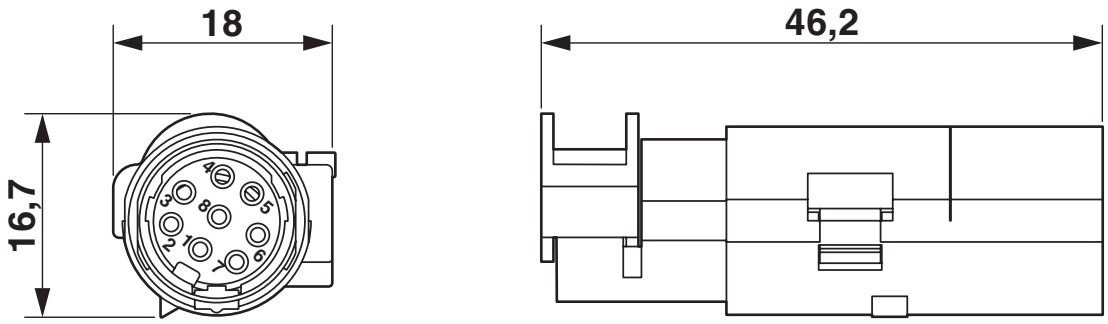

Male insert

Dimensional drawing

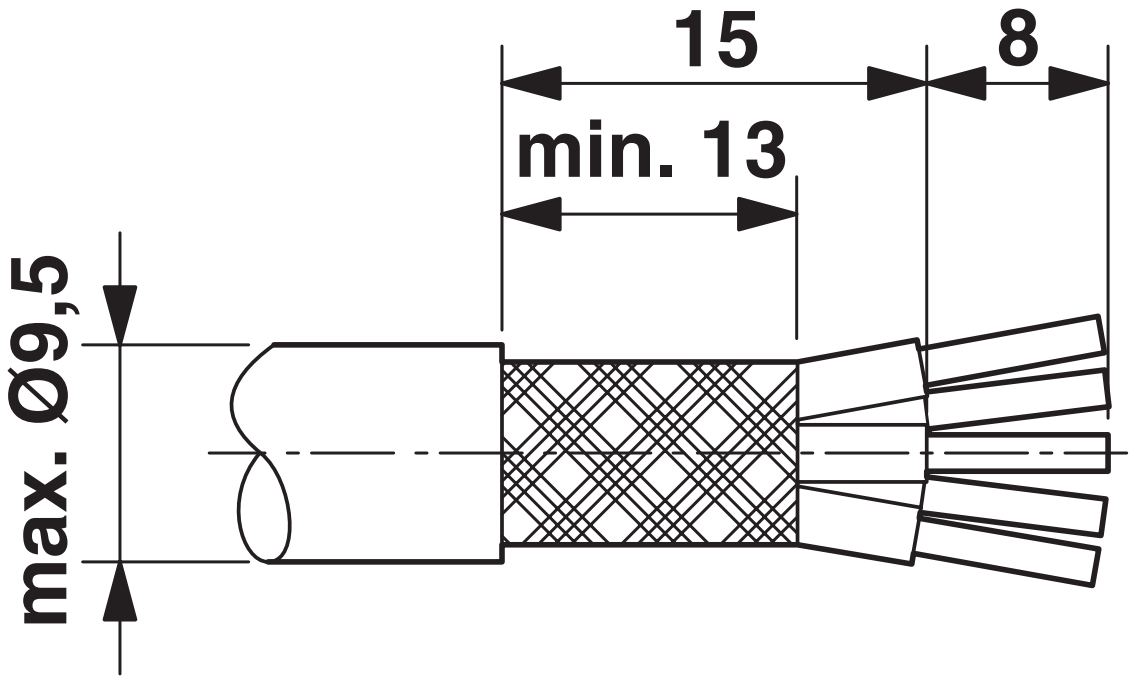

Stripping specifications

Approvals

To download certificates, visit the product detail page: https://www.phoenixcontact.com/us/products/1066082

EAC
Approval ID: RU C-DE.BL08.B.00511

Classifications

ECLASS

ECLASS-11.0	27440205
ECLASS-12.0	27440205
ECLASS-13.0	27440205

ETIM

ETIM 9.0	EC000438

UNSPSC

UNSPSC 21.0	39121500

Environmental product compliance

EU RoHS

Fulfills EU RoHS substance requirements	Yes, No exemptions

China RoHS

Environment friendly use period (EFUP)	EFUP-E
	No hazardous substances above the limits

EU REACH SVHC

REACH candidate substance (CAS No.)	No substance above 0.1 wt%

Accessories

HC-CBU-MOD - Coding element

1636130

https://www.phoenixcontact.com/us/products/1636130



Coding socket for coding up to 16 connectors, for HC Modular

HC-CST-MOD - Coding element

1636127

https://www.phoenixcontact.com/us/products/1636127



Coding peg for coding up to 16 connectors, for HC Modular

HC-M-02-EMC-M - Contact insert module

1417374

https://www.phoenixcontact.com/us/products/1417374



Contact insert module, number of positions: 2, Pin, Crimp connection, 48 V, 10 A, 0.14 mm^2 ... 2.5 mm^2, application: Data/signal, for using two EMC connectors (pin), number of positions: 1, 4, 8

CUC-DSC-C1BAU-S/DSC28 - D-SUB crimp contact

1418784

https://www.phoenixcontact.com/us/products/1418784



D-SUB crimp contact, connection method: Crimp connection, connection cross section: AWG 28- 24

CUC-DSC-C1BAU-S/DSC24 - D-SUB crimp contact

1418786

https://www.phoenixcontact.com/us/products/1418786



D-SUB crimp contact, connection method: Crimp connection, connection cross section: AWG 24- 20

HC-M-B06-MFH-B - Module carrier frame

1182085

https://www.phoenixcontact.com/us/products/1182085



Module carrier frame, size: B6, type : for the panel mounting side (a, b, c, ...), 4 mm^2 ... 6 mm^2, application: Module carrier frame

HC-M-B10-MFH-B - Module carrier frame

1182088

https://www.phoenixcontact.com/us/products/1182088



Module carrier frame, size: B10, type : for the panel mounting side (a, b, c, ...), 4 mm^2 ... 6 mm^2, application: Module carrier frame

HC-M-B16-MFH-B - Module carrier frame

1182090

https://www.phoenixcontact.com/us/products/1182090



Module carrier frame, size: B16, type : for the panel mounting side (a, b, c, ...), 4 mm^2 ... 6 mm^2, application: Module carrier frame

HC-M-B24-MFH-B - Module carrier frame

1182094

https://www.phoenixcontact.com/us/products/1182094



Module carrier frame, size: B24, type : for the panel mounting side (a, b, c, ...), 4 mm^2 ... 6 mm^2, application: Module carrier frame

HC-M-B06-MFH-H - Module carrier frame

1182087

https://www.phoenixcontact.com/us/products/1182087



Module carrier frame, size: B6, type : for the sleeve side (A, B, C, ...), 4 mm^2 ... 6 mm^2, application: Module carrier frame

HC-M-B10-MFH-H - Module carrier frame

1182089

https://www.phoenixcontact.com/us/products/1182089

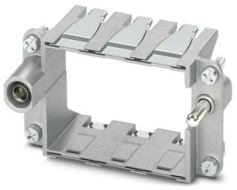

Module carrier frame, size: B10, type : for the sleeve side (A, B, C, ...), 4 mm^2 ... 6 mm^2, application: Module carrier frame

HC-M-B16-MFH-H - Module carrier frame

1182093

https://www.phoenixcontact.com/us/products/1182093



Module carrier frame, size: B16, type : for the sleeve side (A, B, C, ...), 4 mm^2 ... 6 mm^2, application: Module carrier frame

HC-M-B24-MFH-H - Module carrier frame

1182095

https://www.phoenixcontact.com/us/products/1182095



Module carrier frame, size: B24, type : for the sleeve side (A, B, C, ...), 4 mm^2 ... 6 mm^2, application: Module carrier frame

HC-M-08-EMC-DSUB-F - Connector

1066080

https://www.phoenixcontact.com/us/products/1066080



Connector, number of positions: 8, power contacts: 0, control contacts: 8, Socket, Crimp connection, 48 V, 5 A, 0.09 mm^2 ... 0.52 mm^2, external cable diameter:3 mm ... 9.5 mm, application: Data/signal

CRIMPFOX-TC MP - Crimping pliers with digital display

1212510

https://www.phoenixcontact.com/us/products/1212510



Crimping pliers, for turned contacts, universal cross section setting, up to a maximum of 2.5 mm^2, digital display with 0.01 mm increments, pressure lock can be unlocked, including positioning tool

HC-M-EMV-KON-EWZ - Contact removal tool

1678635

https://www.phoenixcontact.com/us/products/1678635



Contact removal tool for HC-M-EMV contact carriers

Phoenix Contact 2024 © - all rights reserved
https://www.phoenixcontact.com

Phoenix Contact USA
586 Fulling Mill Road
Middletown, PA 17057, United States
(+717) 944-1300
info@phoenixcon.com