172074-1 ✔ ACTIVE

Positive Lock | Mark II, Positive Lock 187

TE Internal #: 172074-1

Crimp Terminal Housings, Receptacle, Receptacle, 1 Position, Straight, UL 94V-2, Natural, Nylon, Contact Mating Retention, Positive Lock 187

View on TE.com >

Terminals & Splices > Terminal Housings, Insulation Sleeves & Blocks > Crimp Terminal Housings

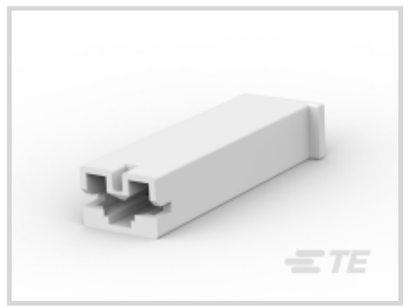






Terminal Type: **Receptacle**

Connector & Housing Type: **Receptacle**

Number of Positions: **1**

Terminal Orientation: **Straight**

UL Flammability Rating: **UL 94V-2**

Features

Product Type Features

Sealable	No
Connector System	Wire-to-Board, Wire-to-Wire
Connector & Contact Terminates To	Wire & Cable
Connector & Housing Type	Receptacle

Configuration Features

Number of Positions	1

Body Features

Primary Product Color	Natural

Contact Features

Terminal Type	Receptacle
Terminal Orientation	Straight
Contact Mating Retention	With

Mechanical Attachment

Mating Alignment Type	Polarization
Mating Alignment	With
Connector Mounting Type	Cable Mount (Free-Hanging)

Housing Features

Housing Material	Nylon

Usage Conditions

Operating Temperature Range	-40 – 105 °C[-40 – 221 °F]

Industry Standards

UL Flammability Rating	UL 94V-2

Packaging Features

Packaging Quantity	1000

Product Compliance

For compliance documentation, visit the product page on TE.com>

EU RoHS Directive 2011/65/EU	Compliant
EU ELV Directive 2000/53/EC	Compliant
China RoHS 2 Directive MIIT Order No 32, 2016	No Restricted Materials Above Threshold
EU REACH Regulation (EC) No. 1907/2006	Current ECHA Candidate List: JAN 2024 (240) Candidate List Declared Against: JAN 2024 (240) Does not contain REACH SVHC
Halogen Content	Low Halogen - Br, Cl, F, I < 900 ppm per homogenous material. Also BFR/CFR/PVC Free
Solder Process Capability	Not applicable for solder process capability

Product Compliance Disclaimer

This information is provided based on reasonable inquiry of our suppliers and represents our current actual knowledge based on the information they provided. This information is subject to change. The part numbers that TE has identified as EU RoHS compliant have a maximum concentration of 0.1% by weight in homogenous materials for lead, hexavalent chromium, mercury, PBB, PBDE, DBP, BBP, DEHP, DIBP, and 0.01% for cadmium, or qualify for an exemption to these limits as defined in the Annexes of Directive 2011/65/EU (RoHS2). Finished electrical and electronic equipment products will be CE marked as required by Directive 2011/65/EU. Components may not be CE marked. Additionally, the part numbers that TE has identified as EU ELV compliant have a maximum concentration of 0.1% by weight in homogenous materials for lead, hexavalent chromium, and mercury, and 0.01% for cadmium, or qualify for an exemption to these limits as defined in the Annexes of Directive 2000/53/EC (ELV). Regarding the REACH Regulation, the information TE provides on SVHC in articles for this part number is based on the latest European Chemicals Agency (ECHA) ‘Guidance on requirements for substances in articles’ posted at this URL: https://echa.europa.eu/guidance-documents/guidance-on-reach

Compatible Parts

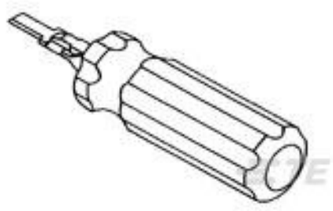

TE Part # 724659-1
EXT TOOL FOR POSITIVE .187

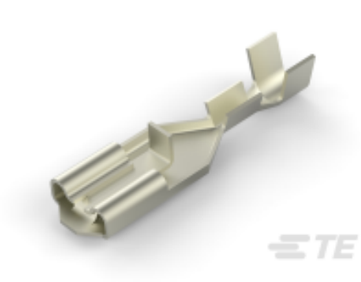

TE Part # 170330-2
PL 187 RECEPTACLE 24-20 AWG NPPHBZ



TE Part # 170332-1
PL 187 RECEPTACLE 18-14 AWG PTPBR

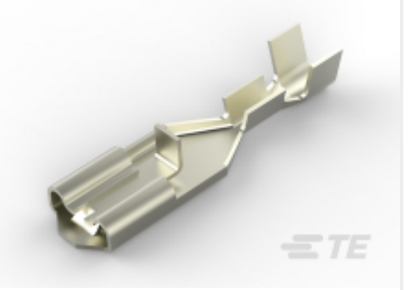

TE Part # 170324-2
PL 187 RECEPTACLE 24-20 AWG 0.3 NPCU



TE Part # 170326-5
187 PL MKII REC. 18-14AWG PTPB



TE Part # 170326-1
187 PL MKII REC. 18-14AWG PTBR



TE Part # 170325-5
187 PL MKII REC. 20-16AWG PTBR



TE Part # 170325-1
187 PL MKII REC. 20-16AWG PTBR



TE Part # 170324-1
187 PL MKII REC. 24-20AWG PTBR



TE Part # 170331-1
PL MKII 187 REC 20-16AWG PTBR LP



TE Part # 170330-1
PL MKII 187 REC 24-20AWG PTBR LP

Also in the Series | Mark II

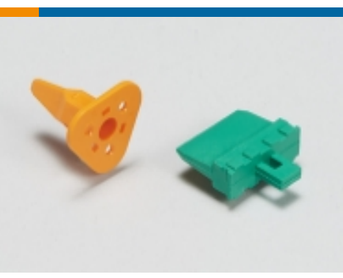

Automotive Connector Locks & Position Assurance(1)

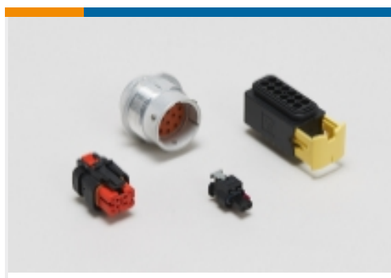

Automotive Housings(16)

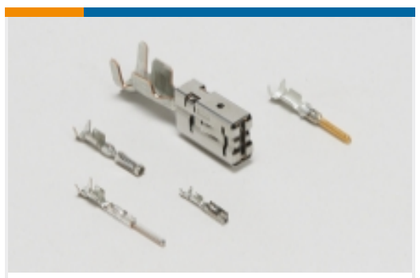

Automotive Terminals(11)



Connector Seals & Cavity Plugs(1)



Crimp Terminal Housings(76)



Insertion & Extraction Tools(2)



Other Automotive Connector Accessories(2)



Quick Disconnects(57)

Also in the Series | Positive Lock 187



Crimp Terminal Housings(86)



Insertion & Extraction Tools(2)



Insulation Boots & Sleeves(7)

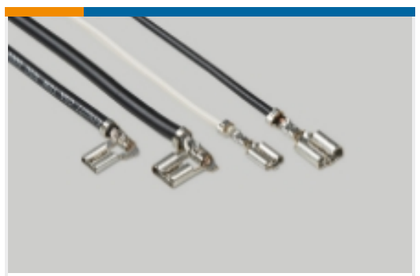

Quick Disconnects(57)

Customers Also Bought



TE Part #5-917687-1
2.5 SIGNAL D/LOCK PLUG HSG 3P (GWT)



TE Part #936604-1
PL 250 FLAG REC 18-14AWG 0.40X28. 0 PTPBR

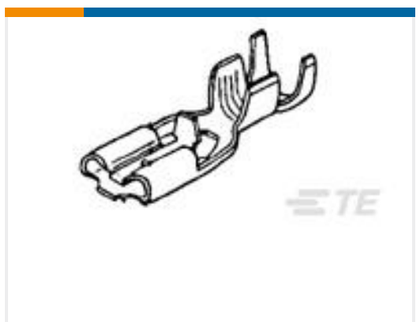

TE Part #170331-1
PL MKII 187 REC 20-16AWG PTBR LP

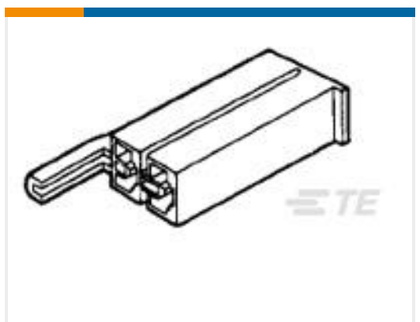

TE Part #1-174587-6
PL MK2 2P 187 HOUSING RECEPTACLE BLUE



TE Part #2371020-3
DBL LOCK PLATE FOR SMC PLUG 3P



TE Part #3-1633917-4
ANVIL, COMBINATION

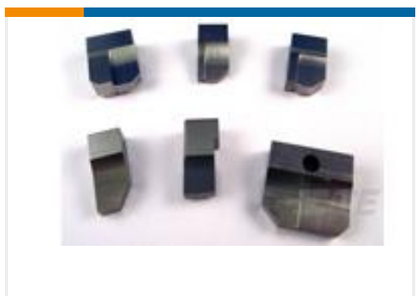

TE Part #1463047-6
ANVIL,COMPACT SQUIB 1612124-3

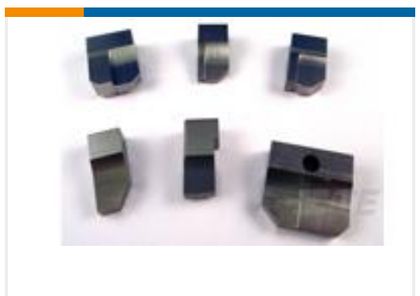

TE Part #1729341-4
ANVIL,COMBINATION



TE Part #2-1463696-3
CRIMPER,WIRE

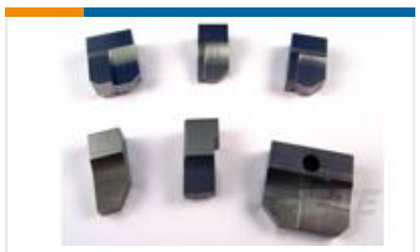

TE Part #3-1729341-4
ANVIL,COMBINATION

Documents

Product Drawings

187 HSG. PLMKII REC. NAT

English

CAD Files

3D PDF

3D

Customer View Model

ENG_CVM_CVM_172074-1_P1.2d_dxf.zip

English

Customer View Model

ENG_CVM_CVM_172074-1_P1.3d_igs.zip

English

Customer View Model

ENG_CVM_CVM_172074-1_P1.3d_stp.zip

English

By downloading the CAD file I accept and agree to the Terms and Conditions of use.

Datasheets & Catalog Pages

Positive Lock Receptacles

English

Product Specifications

Application Specification

English

Agency Approvals

UL Report

English