

Ultrasonic sensor, receiver

UBE15M-F54-H2-V1

- Large sensing range
- Large possible lateral distance between emitter and receiver
- Separate evaluation

Multi-head system

Dimensions

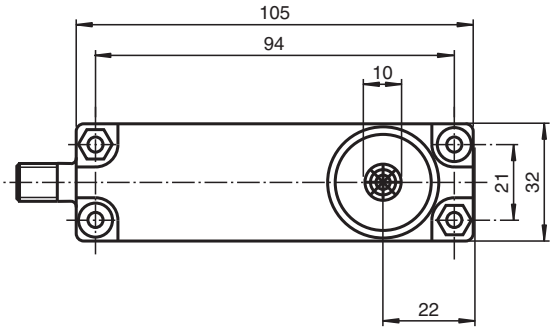

Bore hole and countersinking
for screws/hexagon M4

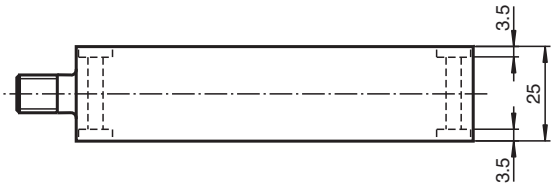

Technical Data

General specifications		
Sensing range		0 ... 15000 mm , emitter - receiver synchronised
Transducer frequency		approx. 40 kHz
Opening angle		± 45 ° at -6 dB
Temperature drift of echo propagation delay		0.2 %/K
Electrical specifications		
Operating voltage	U_B	10 ... 30 V DC , ripple 10 $\%_{SS}$
No-load supply current	I_0	≤ 15 mA (typ. 10 mA at U_B = 24 V DC)
Output		
Output type		1 pulse output for echo run time, open collector NPN, short-circuit proof 0 level (active): U_{OL} ≤ 2 V, I_{OL} ≤ 15 mA 1 level (inactive): U_{OH} = U_B (pull-up R = 330 kOhm)
Compliance with standards and directives		
Standard conformity		

Release date: 2025-05-16 Date of issue: 2025-05-16 Filename: 109086_eng.pdf

Technical Data

Standards		EN IEC 60947-5-2:2020 IEC 60947-5-2:2019
Approvals and certificates		
UL approval		cULus Listed, Class 2 Power Source
CCC approval		CCC approval / marking not required for products rated ≤36 V
Ambient conditions		
Ambient temperature		0 ... 50 °C (32 ... 122 °F)
Storage temperature		-40 ... 85 °C (-40 ... 185 °F)
Mechanical specifications		
Connection type		Connector plug M12 x 1 , 4-pin
Degree of protection		IP30
Material		
Housing		PBT
Mass		110 g
Dimensions		
Height		31 mm
Width		105 mm
Length		25 mm

Connection Assignment

Standard symbol/Connection:

Receiver

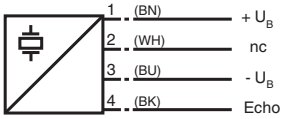

Core colours in accordance with EN 60947-5-2.

Connection Assignment

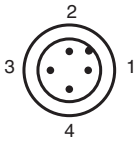

Release date: 2025-05-16 Date of issue: 2025-05-16 Filename: 109086_eng.pdf

Characteristic Curve

Direction characteristics

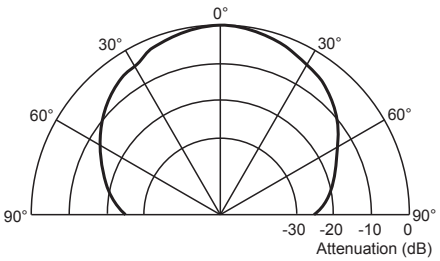

Characteristic response curve

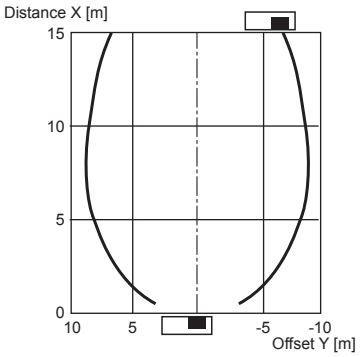

Permissible distance (offset) between the optical axis of the emitter and receiver.

Characteristic response curve

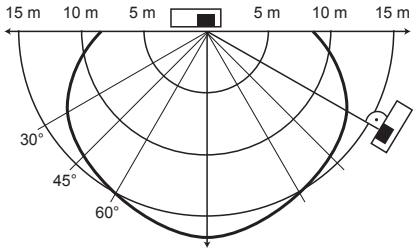

Release date: 2025-05-16 Date of issue: 2025-05-16 Filename: 109086_eng.pdf

Function

Function

The receiver is part of a complete system consisting of receiver, emitter, and controller

Transmitter UBE15M-F54-H1-V1

Controller: UH3-16E4A-K15-R3

In real mode, the transmitter and receiver will not be not aligned to each other. This reduces the detection range that can be achieved.

The characteristic response curve to the side illustrates examples of the detection range of the system under the following operating conditions.

- The transmitter and receiver are arranged so they lie parallel opposite each other. The graph shows the detection range as a function of lateral offset.
- The receiver is arranged vertically downward, while the emitter is arranged in the direction of the receiver. The graph shows the detection range as a function of the angle of incidence.

This makes it possible to evaluate the detection range of the system as a function of the positioning of the transmitter and receiver for conditions that will occur in practical usage.



Cable sockets with built-in indicator LEDs must not be used to connect this device!

Release date: 2025-05-16 Date of issue: 2025-05-16 Filename: 109086_eng.pdf