THIS DRAWING IS UNPUBLISHED. RELEASED FOR PUBLICATION 20
© COPYRIGHT 20 BY - ALL RIGHTS RESERVED.

LOC	DIST
-	-

REVISIONS

P	LTR	DESCRIPTION	DATE	DWN	APVD
	A	REVISED PER ECO-12-018102	17OCT2012	MGM	CT
	B	ECO-13-004759	01APR2013	KG	DH
	C	REVISED PER ECO-14-014385	20NOV14	MGM	CT

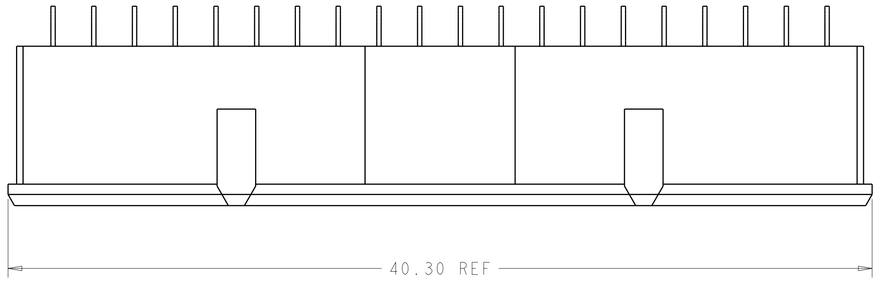

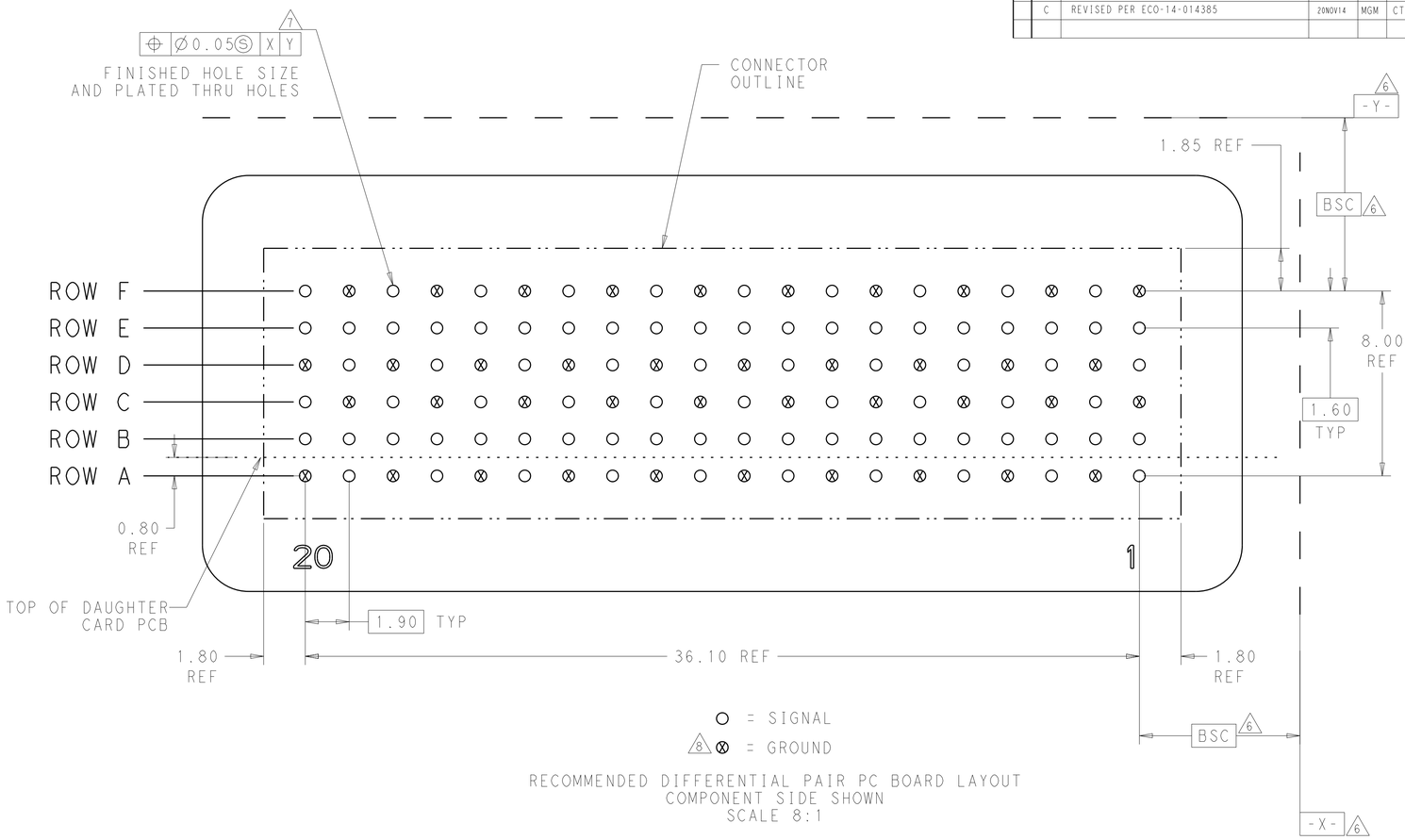

○ = SIGNAL

8 ⊗ = GROUND

RECOMMENDED DIFFERENTIAL PAIR PC BOARD LAYOUT
COMPONENT SIDE SHOWN
SCALE 8:1

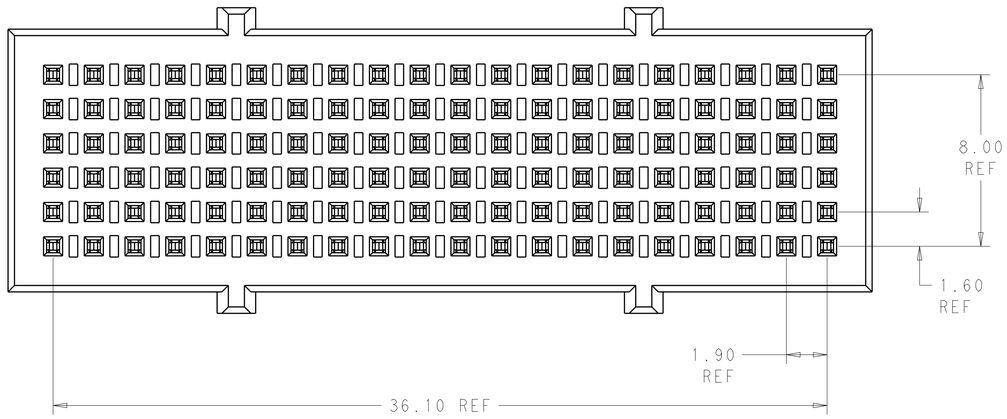

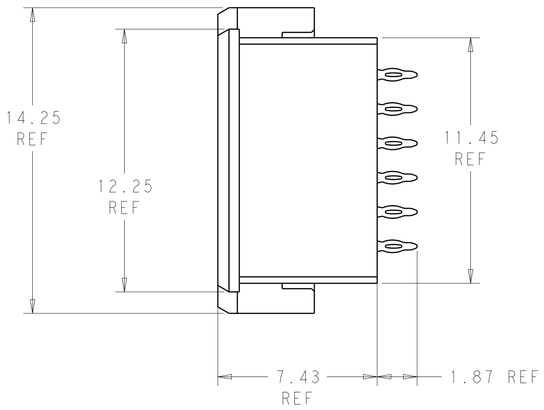

1. MATERIAL:
   CONTACT - COPPER ALLOY
   HOUSING - LCP, COLOR - BLACK
2. FINISH:
   MATING AREA: 1.27µm MIN GOLD OVER
   1.25µm MIN NICKEL
3. FINISH:
   COMPLIANT PIN AREA: 0.38µm MIN BRIGHT TIN LEAD
   OVER 1.27µm MIN NICKEL
4. FINISH:
   COMPLIANT PIN AREA: 0.38µm MIN MATTE TIN
   OVER 1.27µm MIN NICKEL
5. --
6. DATUMS AND BASIC DIMENSIONS ESTABLISHED BY CUSTOMER.
7. REFERENCE APPLICATION SPEC 114-13267 FOR RECOMMENDED PLATING THRU HOLE DIAMETER AND PLATING THICKNESS.
8. RECOMMENDED DIFFERENTIAL PAIR CONFIGURATION SHOWN. THE CONNECTOR UTILIZES AN OPEN PIN FIELD AND CAN BE LAID OUT IN A SINGLE-ENDED CONFIGURATION.

2 4	2102234-2
2 3	2102234-1
FINISH	PART NUMBER

THIS DRAWING IS A CONTROLLED DOCUMENT. DIMENSIONING AND TOLERANCING PER ASME Y14.5M-2009

DIMENSIONS: mm

TOLERANCES UNLESS OTHERWISE SPECIFIED:
0 PLC ±-
1 PLC ±0.13
2 PLC ±0.05
3 PLC ±-
4 PLC ±-
ANGLES ±2°

MATERIAL 1

FINISH -

DWN D. BELACK 24NOV2010
CHK A. TSANG -
APVD M. McALONIS -
PRODUCT SPEC 108-2409
APPLICATION SPEC 114-13267
WEIGHT ~5.21g

TE Connectivity

NAME Fortis Zd, 2-PAIR, 20-COLUMN VERTICAL, FULL SHROUD ASSEMBLY

SIZE	CAGE CODE	DRAWING NO	RESTRICTED TO
A1	00779	C-2102234	-

Customer Drawing | SCALE 7:1 | SHEET 1 OF 1 | REV C